MECHANISM COMPILATION

1. FRAME & COVER COMPONENTS
本体・カバー関係

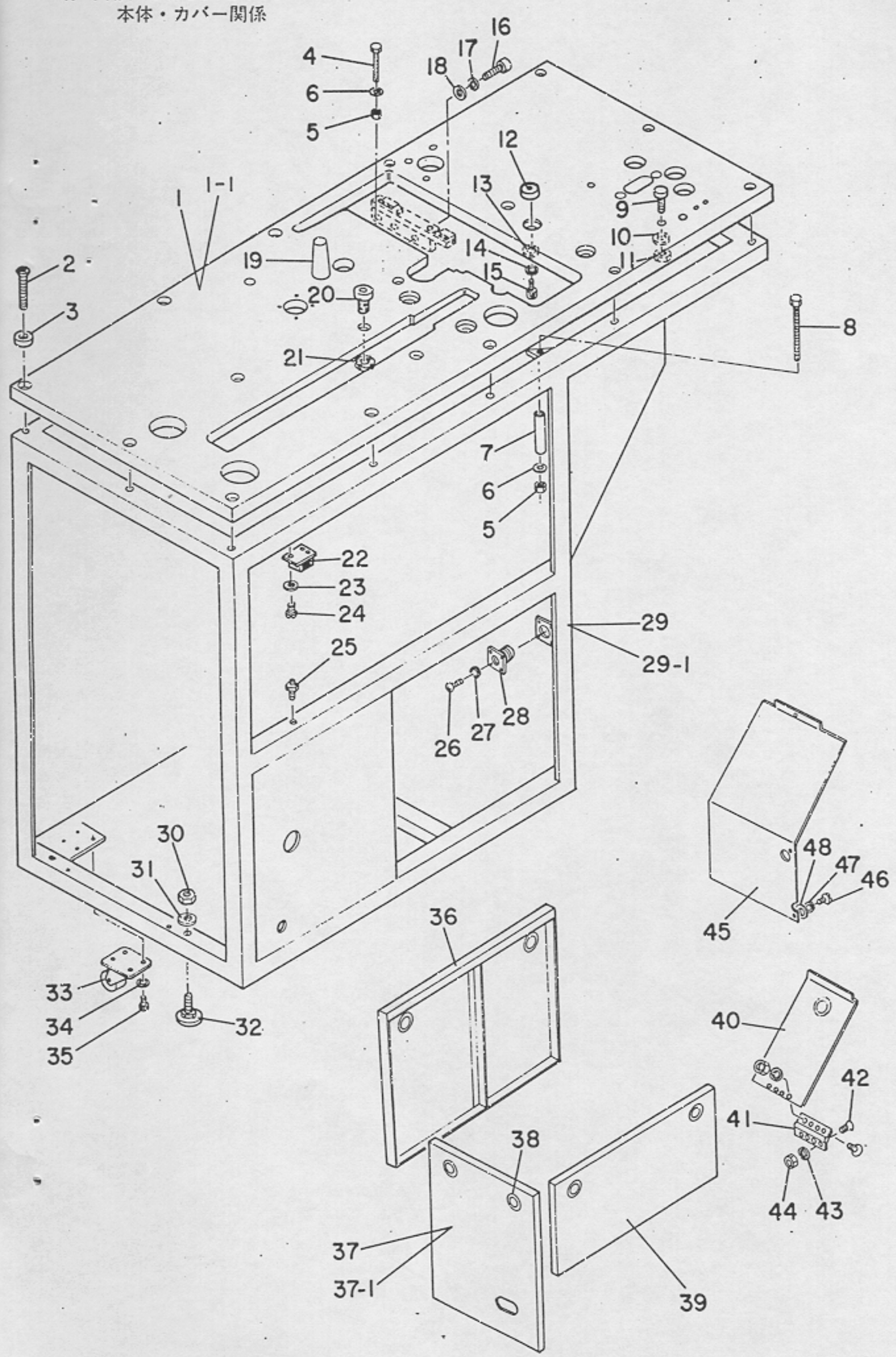

Ref. No.	Note 注記	Part No. 品番	Description	E. C. 変更年月	品名	Amt. Req. 数量
1	*	G5002-119-000	TABLE	D.01/84	テーブル	-
1-1	*	G5002-119-000-A	TABLE	A.01/84	テーブル	1
2		SM-1043001-SC	SCREW M4X0.7 L=30		サラネジ	14
3		G5021-116-000	FLAT WASHER		サラサカネ	14
4		G5058-116-000	ADJUSTING BOLT		チヨーセツボルト	2
5		NM-6050001-SC	NUT M5		ロツカクナツト M5X0.8 1シユ	4
6		WP-0531000-SC	WASHER M5		ヒラサカネ コカタマル M5	4
7		G5058-116-B00	COLLAR		カラー A	2
8		G5058-116-A00	ADJUSTING BOLT		ミシンチヨウセツ ボルト	2
9		G5022-116-000	POSITIONING PIN		イチキメピン	2
10		WP-0531000-SC	WASHER M5		ヒラサカネ コカタマル M5	2
11		NM-6050001-SC	NUT M5		ロツカクナツト M5X0.8 1シユ	2
12		G5839-116-000	MAGNET CATCH		マクネツト キヤツチ	5
13		WP-0430800-SC	WASHER 4.3X8X0.8		ヒラサカネ コカタマル M4	5
14		WS-0410002-KN	SPRING WASHER M4		ハネサカネ M4	5
15		SM-6041602-TP	SCREW M4X0.7 L=16		ロツカクアナボルト M4X0.7 L=16	5
16		SM-6082002-TP	SCREW M8 L=20		ロツカクアナボルト	3
17		WS-0820002-KN	SPRING WASHER M8		ハネサカネ M8	3
18		WP-0841601-SC	WASHER 8.4X17.4X1.6		ヒラサカネ ミカキマル M8	3
19		G8216-119-000	FRAME SUPPORT BAR		トーブササエボー	1
20		G5024-116-000	POSITIONING SLITTED-BOSS		イチキメアナボス	2
21		G5853-116-000	DISMOUNTING NUT		デイスマウテイクナツト	2
22		G5831-116-000	MAGNET CATCH		マクネツトキヤツチ MC11ニタ	7
23		WP-0320500-SC	WASHER 3.2X7.0X0.5		ヒラサカネ コカタマル M3	14
24		SM-3030601-SC	SCREW M3X0.5 L=6		マルコネジ	14
25		G5025-116-000	COVER POSITIONING PIN		カバーイチキメピン	6
26		SM-3030601-SC	SCREW M3X0.5 L=6		マルコネジ	4
27		WS-0310002-KN	SPRING WASHER 3.1X5.9X0.7		ハネサカネ 3.1X5.9X0.7	4
28		HK-0025006-00	METAL CONNECTOR		メタルコネクタ	1
29	*	G5001-119-000-C	INSTALLATION BASE	D.09/83	ホンタイ	-
29-1	*	G5001-119-000-D	INSTALLATION BASE	A.09/83	ホンタイタイ	1
30		NH-6120001-SC	NUT M12		ロツカクナツト	4
31		WP-1302501-SC	WASHER 13X24X2.5		ヒラサカネ 13X24X2.5	4
32		GAS-11111000	ADJUST BOLT		アシヤスト ボルト	4
33		G5846-116-000	CASTER		キヤスタ	4
34		WS-0610002-KN	SPRING WASHER 6.1X12.2X1.5		ハネサカネ M6	16
35		SM-6061002-TP	SCREW M6 L=10		ロツカクアナボルト M6 L=10	16
36		G5006-119-000	COVER 1		カバー 1	1
37	*	G5005-119-000	COVER 2	D.07/83	カバー 2	-
37-1	*	G5005-119-000-A	COVER 2	A.07/83	カバー 2	1
38		G5841-116-000	GROMMET		クロメツト	7
39		G5004-119-000	COVER 3		カバー 3	1
40	*	G5008-119-000	COVER 5	A.04/83	カバー 5	1
41	*	G5842-116-A00	FLAT HINGE	A.04/83	ヒラカタ チヨウハン	1
42	*	SM-1041201-SC	SCREW M4 L=12	A.04/83	サラコネジ M4X0.7 L=12	8
43	*	WS-0410002-KN	SPRING WASHER M4	A.04/83	ハネサカネ M4	8
44	*	NM-6040001-SC	NUT M4	A.04/83	ロツカクナツト M4X0.7 1シユ	8
45	*	G5007-119-000	COVER 4	D.04/83	カバー	-
46	*	SM-3051201-SC	SCREW M5X0.8 L=12	D.04/83	マルコネジ	-
47	*	WS-0510002-KN	SPRING WASHER 5.1X8.5X1.3	D.04/83	ハネサカネ 5.1X9.2X1.3	-
48	*	WP-0531000-SC	WASHER M5	D.04/83	ヒラサカネ コカタマル M5	-

2. FRAME COMPONENTS
本体関係

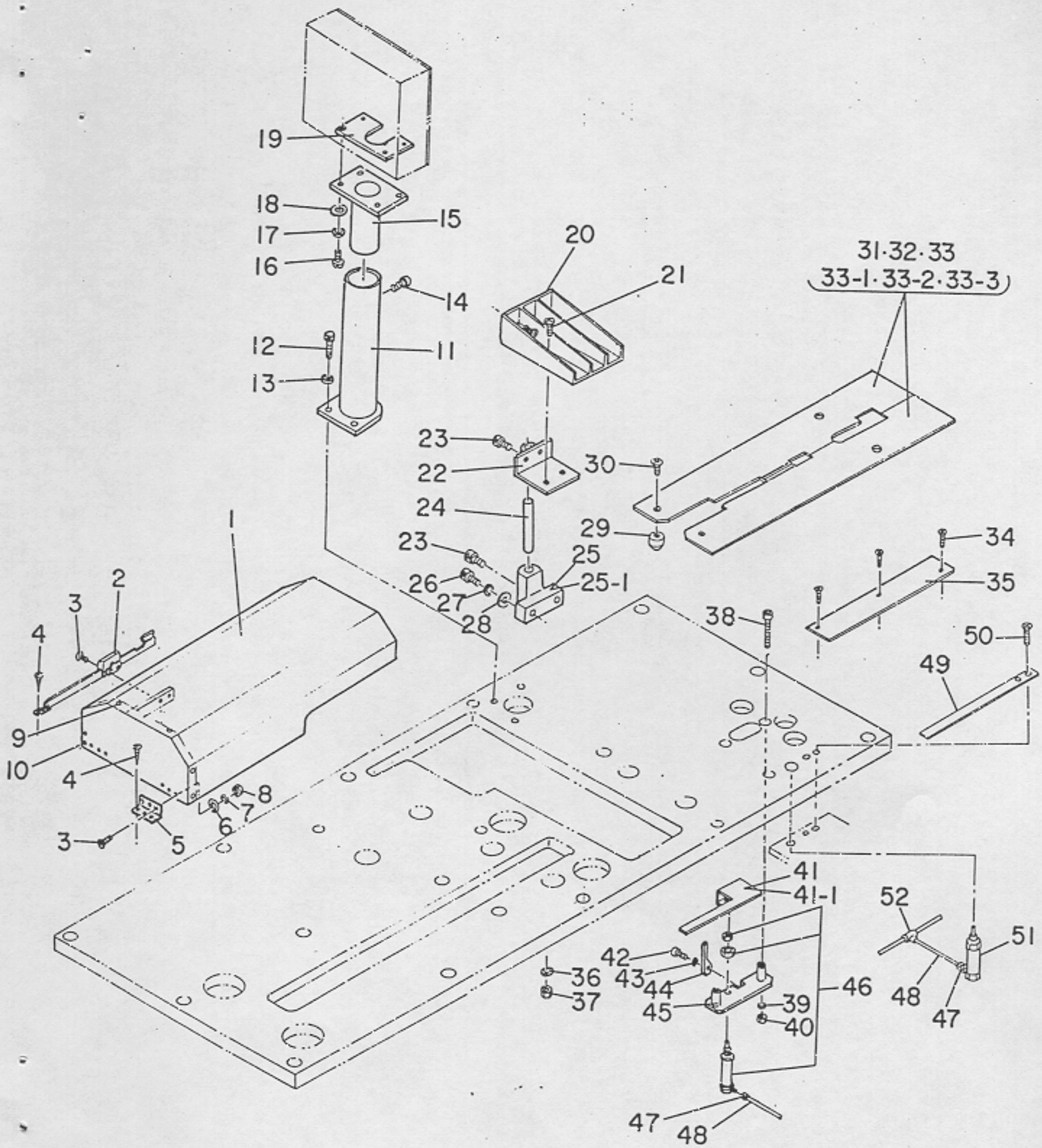

Ref. No.	Note 注記	Part No. 品番	Description	E. C. 変更年月	品名	Amt. Req. 数量
1		G5009-119-000	TOP COVER		ﾃﾝｶﾊﾞｰ	1
2		G5844-116-000	QUICK-COUPLING STAY		ﾜﾝﾀﾂﾁｽﾃｰ	1
3		SM-1031551-SP	SCREW M3X0.5 L=15		ｻﾗｺﾈｼﾞ M3X0.5 L=15	8
4		SK-1351600-SC	WOOD SCREW D=3.5 L=16		ｻﾗﾓｸﾈｼﾞ D=3.5 L=16	8
5		G5642-116-000	FLAT HINGE		ﾋﾗｶﾞﾀﾁｮｰﾊﾞﾝ	2
6		WP-0320501-SC	WASHER 3.2X7X0.5		ﾋﾗｻﾞｶﾞﾈ 3.2X7X0.5	6
7		WS-0310002-KN	SPRING WASHER 3.1X5.9X0.7		ﾊﾞﾈｻﾞｶﾞﾈ 3.1X5.9X0.7	6
8		NM-6030001-SC	NUT M3		ﾛｯｸﾅｯﾄ M3X0.5 1ｼｭ	6
9		SM-3051201-SC	SCREW M5X0.8 L=12		ﾏﾙｺﾈｼﾞ	6
10		SM-3052001-SC	SCREW M5X0.8 L=20		ﾏﾙｺﾈｼﾞ	2
11		G6501-119-000	STAND		ｿｳｻﾊﾞﾝ ｼﾁｭｳ	1
12		SM-6054002-TP	SCREW M5X0.8 L=40		ﾛｯｸｱﾅﾎﾞﾙﾄ	3
13		WS-0510002-KN	SPRING WASHER 5.1X8.5X1.3		ﾊﾞﾈｻﾞｶﾞﾈ 5.1X9.2X1.3	3
14		SM-6040502-TP	SCREW M4X0.7 L=5		ﾛｯｸｱﾅﾎﾞﾙﾄ	1
15		G6502-119-000	BRACKET		ｿｳｻｲﾀﾞ ﾄﾘﾂｹﾌﾞﾗｹｯﾄ	1
16		SM-3051401-SC	SCREW M5X0.8 L=14		ﾏﾙﾈｼﾞ	4
17		WS-0510002-KN	SPRING WASHER 5.1X8.5X1.3		ﾊﾞﾈｻﾞｶﾞﾈ 5.1X9.2X1.3	4
18		WP-0531000-SC	WASHER M5		ﾋﾗｻﾞｶﾞﾈ ｺｶﾞﾀﾏﾙ M5	4
19		G6503-119-000	PLATE		ﾌﾟﾗｹｯﾄ ﾎｼﾞｮｲﾀﾞ	1
20		G5036-116-000	CLOTH RECEIVER		ﾇﾉｳｹｻﾞﾗ	1
21		SM-1040601-SC	SCREW M4X0.7 L=6		ｻﾗｺﾈｼﾞ M4X0.7 L=6	4
22		G5041-116-0A0	CLOTH RECEIVER FASTENER ASM.		ﾇﾉｳｹｻﾗﾄﾞﾒ ｸﾐ	1
23		SM-6061002-TP	SCREW M6 L=10		ﾛｯｸｱﾅﾎﾞﾙﾄ M6 L=10	3
24		G5038-116-000	CLOTH RECEIVER ROD		ﾇﾉｳｹｻﾗﾎﾞｰ	1
25	*	G5060-116-000	CLOTH RECEIVER ROD CLAMP	D.04/83	ﾇﾉｳｹｻﾗﾎﾞｰ ﾄﾒｶﾅｸﾞ	-
25-1	*	G5010-119-000	CLOTH RECEIVER ROD CLAMP	A.04/83	ﾇﾉｳｹｻﾞﾗﾎﾞｰ ﾄﾒｶﾅｸﾞ	1
26		SM-6051402-TP	SCREW M5X0.8 L=14		ﾛｯｸｱﾅﾎﾞﾙﾄ	2
27		WS-0510002-KN	SPRING WASHER 5.1X8.5X1.3		ﾊﾞﾈｻﾞｶﾞﾈ 5.1X9.2X1.3	2
28		WP-0531000-SC	WASHER M5		ﾋﾗｻﾞｶﾞﾈ ｺｶﾞﾀﾏﾙ M5	2
29		G5023-116-000	POSITIONING BOSS		ｲﾁｷﾞﾒﾎﾞｽ	2
30		SM-1040801-SC	SCREW M4X0.7 L=8		ｻﾗｺﾈｼﾞ M4X0.7 L=8	2
31	◇01	G5003-119-AA0	SEWING TABLE ASM. 10,12MM	D.07/83	ﾎｰｾｲﾃｰﾌﾞﾙ A ｸﾐ	-
32	◇02	G5003-119-BA0	SEWING TABLE ASM. 14,16MM	D.07/83	ﾎｰｾｲﾃｰﾌﾞﾙ B ｸﾐ	-
33	◇03	G5003-119-CA0	SEWING TABLE ASM. 18,20MM	D.07/83	ﾎｰｾｲﾃｰﾌﾞﾙ C ｸﾐ	-
33-1	◇01	G5003-119-AA0-A	SEWING TABLE ASM. 10,12MM	A.07/83	ﾎｰｾｲﾃｰﾌﾞﾙ A ｸﾐ	1
33-2	◇02	G5003-119-BA0-A	SEWING TABLE ASM. 14,16MM	A.07/83	ﾎｰｾｲﾃｰﾌﾞﾙ B ｸﾐ	1
33-3	◇03	G5003-119-CA0-A	SEWING TABLE ASM. 18,20MM	A.07/83	ﾎｰｾｲﾃｰﾌﾞﾙ C ｸﾐ	1
34	*	SM-1042001-SC	SCREW M4X0.7 L=20	D.01/84	ｻﾗﾈｼﾞ	-
35	*	GSP-02001000	SUB PLATE	D.01/84	ｻﾌﾞﾌﾟﾚｰﾄ B	-
36	*	WP-0430800-SC	WASHER 4.3X8X0.8	D.01/84	ﾋﾗｻﾞｶﾞﾈ ｺｶﾞﾀﾏﾙ M4	-
37	*	NM-6040001-SC	NUT M4	D.01/84	ﾛｯｸﾅｯﾄ M4X0.7 1ｼｭ	-
38		SM-6055502-TP	SCREW M5X0.8 L=55		ﾛｯｸｱﾅﾎﾞﾙﾄ	2
39		WS-0510002-KN	SPRING WASHER 5.1X8.5X1.3		ﾊﾞﾈｻﾞｶﾞﾈ 5.1X9.2X1.3	2
40		NM-6050001-SC	NUT M5		ﾛｯｸﾅｯﾄ M5X0.8 1ｼｭ	2
41	*	G5020-116-B00	INTERLINING CLAMP	D.07/83	ｼﾝｼﾞｵｴ	-
41-1	*	G5020-116-B00-A	INTERLINING CLAMP	A.07/83	ｼﾝｼﾞｵｴ	1
42		SM-6041002-TP	SCREW M4 L=10		ﾛｯｸｱﾅﾎﾞﾙﾄ M4X0.7 L=10	1
43		WS-0410002-KN	SPRING WASHER M4		ﾊﾞﾈｻﾞｶﾞﾈ M4	1
44		G5019-116-00A	GUIDE PLATE		ｶﾞｲﾄﾞﾌﾟﾚｰﾄ	1
45		G5019-116-B00	CYLINDER BASE		ｼﾝｼﾞｵｴ ｼﾘﾝﾀﾞｰﾀﾞｲ	1
46		G5412-116-AA0	INTERLINING CLAMPING CYL. ASM.		ｼﾝｼﾞｺﾃｲ ｼﾘﾝﾀﾞｰ	1
47		PJ-0320525-01	HOSE NIPPLE		ｳﾚﾀﾝﾎｰｽ ﾆｯﾌﾟﾙ	2
48		BT-0400251-EB	TUBE HOSE, BLACK		ﾎﾟﾘｳﾚﾀﾝ ﾁｭｰﾌﾞ ｸﾛ	0.2
49		GSA-01001000	FLAT SPRING		ｲﾀﾊﾞﾈ	1
50		SM-1043001-SC	SCREW M4X0.7 L=30		ｻﾗﾈｼﾞ	2
51		G5412-116-0A0	INTERLINING CLAMPING CYL. ASM.		ｼﾘﾝﾀﾞｰ ｸﾐ	1
52		PJ-3050400-01	TEE UNION		ﾃｰｽﾞﾕﾆｵﾝ	1

Note (注記) ◇01 ..... For 9.5, 10, 12 mm — 9.5、10、12mm用
◇02 ..... For 14, 16 mm — 14、16mm用
◇03 ..... For 18, 20 mm — 18、20mm用

3. PEDAL & KNEE SWITCH COMPONENTS
足踏ミスイッチ・ヒザスイッチ関係

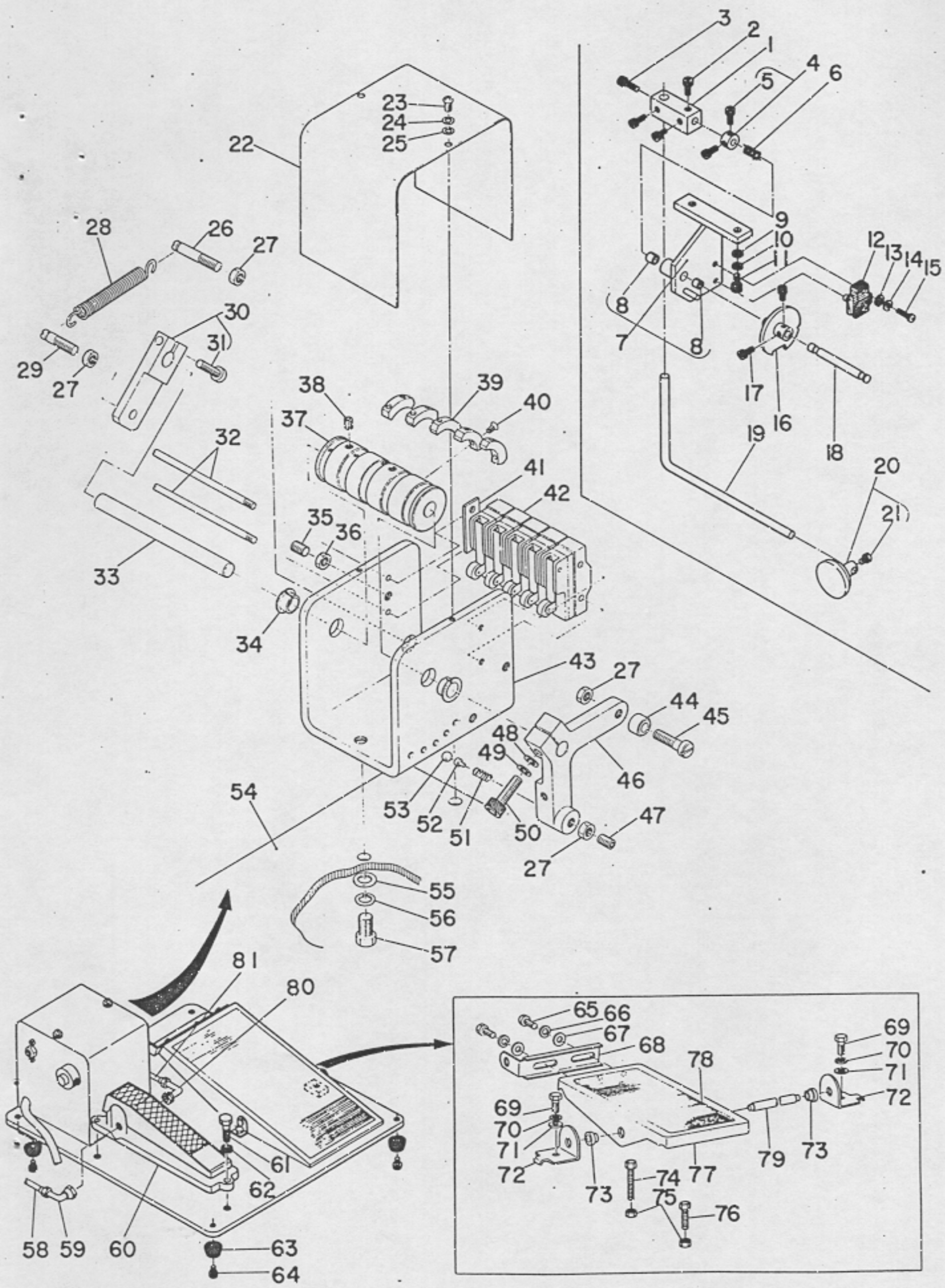

Ref. No.	Note 注記	Part No. 品番	Description	E. C. 変更年月	品名	Amt. Req. 数量
1		G5050-116-000	SQUARE BOSS		カクボス	1
2		SM-6060802-TP	SCREW M6 L=8		ロッカクアナボルト M6 L=8	3
3		SM-6061202-TP	SCREW M6 L=12		ロッカクアナボルト M6 L=12	1
4		G5047-116-0A0	COLLAR ASM		カラー クミ	1
5		SM-6061002-TP	SCREW M6 L=10		ロッカクアナボルト M6 L=10	(2)
6		G5048-116-000	COIL SPRING		ネジリバネ	1
7		G5045-116-0A0	BRACKET ASM.		トリツケブラケット クミ	1
8		G5816-116-000	DRY BEARING		トライヘアリング	(2)
9		WP-0641601-SC	WASHER		ヒラザカネ ミカキマル M6	2
10		WS-0610002-KN	SPRING WASHER 6.1X12.2X1.5		バネザカネ M6	2
11		SM-6061402-TP	SCREW M6 L=14		ロッカクアナネジ M6 L=14	2
12		HA-0007000-00	MICROSWITCH		マイクロスイッチ	1
13		WP-0430800-SC	WASHER 4.3X8X0.8		ヒラザカネ コカタマル M4	2
14		WS-0410002-KN	SPRING WASHER M4		バネザカネ M4	2
15		SM-3042201-SC	SCREW M4X0.7 L=22		マルコネジ	2
16		G5051-116-000	SWITCH CAM		スイッチカム	1
17		SM-6061402-TP	SCREW M6 L=14		ロッカクアナネジ M6 L=14	2
18		G5049-116-000	CAM SHAFT		カムシャフト	1
19		G5046-116-000	ARM		アーム	1
20		G5081-119-0A0	KNEE PRESS.PLATE ASM.		ヒザアテイタ クミ	1
21		SM-6051202-TP	SCREW M5X0.8 L=12		ロッカクアナボルト M5X0.8 L=12	(1)
22		G5077-116-A00	LMITING BOX COVER		リミット ボックスカバー	1
23		SM-3040601-SC	SCREW M4X0.7 L=6		マルコネジ	2
24		WS-0410002-KN	SPRING WASHER M4		バネザカネ M4	2
25		WP-0430800-SC	WASHER 4.3X8X0.8		ヒラザカネ コカタマル M4	2
26		G5075-116-000	ANCHOR		バネカケ B	1
27		NM-6060001-SC	NUT M6		ロッカクナット M6 1シュ	4
28		G5078-116-000	SWITCH SPRING		スイッチバネ	1
29		G5075-116-A00	ANCHOR		コタンSW バネカケ B	1
30		G5088-116-AA0	ANCHOR ARM ASM.		バネカケアーム クミ	1
31		SM-6051402-TP	SCREW M5X0.8 L=14		ロッカクアナボルト	(1)
32		G5067-116-A00	LIMITER INSTALLATION ROD		リミットトリツケボー	2
33		G5069-116-A00	SHAFT		シャフト	1
34		G5854-116-000	DRY BEARING		ツバツキ トライヘアリング	2
35		SM-8061402-TP	SCREW M6 L=14		トメネジ	1
36		NM-6060001-SC	NUT M6		ロッカクナット M6 1シュ	1
37		G5065-116-A00	SWITCH DRUM		スイッチドラム	1
38		SM-8050802-TP	SCREW M5X0.8 L=8		トメネジ M5X0.8 L=8	2
39		G5068-116-000	LIMITING DOG		リミットドック	5
40		SS-1061010-SP	SCREW 3/32-56 L=10		サラネジ 3/32-56 L=10	5
41		G5087-116-A00	WASHER PLATE		コタンSW リミットアテイタ	1
42		HA-0007000-00	MICROSWITCH		マイクロスイッチ	5
43		G5064-116-A00	LIMITING BOX		リミットボックス	1
44		G5072-116-000	ROLLER		コロ 8ミリ	1
45		G5073-116-000	ROLLER PIN		ローラピン	1
46		G5066-116-000	PEDAL LEVER		アシブミレバー	1
47		SM-8061202-TP	SCREW M6 L=12		トメネジ	1
48		WP-0641601-SC	WASHER		ヒラザカネ ミカキマル M6	1
49		WS-0610002-KN	SPRING WASHER 6.1X12.2X1.5		バネザカネ M6	1
50		SM-6062502-TP	SCREW M6 L=25		ロッカクアナボルト M6 L=25	1
51		B1214-038-000	PLUNGER SPRING		プランジャー オサエバネ	1
52		G5015-116-000	SPRING GUIDE		バネガイド	1
53		G5845-116-000	STEEL BALL		コーキュー	1
54		G5063-116-000	PEDAL BASE		アシブミヘタルタイ	1
55		WP-0841600-SC	WASHER		ヒラザカネ	2
56		WS-0820002-KN	SPRING WASHER M8		バネザカネ M8	2
57		SM-9081403-SC	SCREW M8 L=14		ロッカクボルト	2
58		BT-0400251-EB	TUBE HOSE, BLACK		ポリウレタン チューブ クロ	1.8
59		PJ-3040452-01	ELBOW UNION D=4		エルボユニオン	1
60		G5421-116-0A0	MECHANICAL VALVE ASM.		アシブミ メカニカルバルブ クミ	1
61		SM-3061601-SC	SCREW M6 L=16		マルネジ	3
62		WS-0610002-KN	SPRING WASHER 6.1X12.2X1.5		バネザカネ M6	3
63		G5840-116-000	RUBBER FOOT		ゴムアシ	4
64		SM-6041002-TP	SCREW M4 L=10		ロッカクアナボルト M4X0.7 L=10	4
65		SM-9061203-SE	SCREW M6 L=12		ロッカクボルト M6 L=12	2
66		WS-0621210-KR	SPRING WASHER 6.2X11.4X1.2		バネザカネ 6.2X11.4X1.2	2
67		WP-0671016-SE	WASHER 6.7X13X1		ヒラザカネ 6.7X13X1	2
68		B8125-280-00E	PEDAL ADJUSTING PLATE		フミイタ チョウセツイタ	1
69		SM-6082002-TP	SCREW M8 L=20		ロッカクアナボルト	2
70		WS-0820002-KN	SPRING WASHER M8		バネザカネ M8	2
71		WP-0841600-SC	WASHER		ヒラザカネ	2
72		D8114-555-B0E	PEDAL SHAFT BRACKET		フミイタシク ウケイタ	2
73		D8113-555-B00	PEDAL BUSHING		フミイタ ブシュ	2
74		SM-9065503-SP	SCREW M6 L=55		6カクボル M6 L=55	1
75		NM-6060001-SC	NUT M6		ロッカクナット M6 1シュ	2
76		SM-9063503-SP	SCREW M6 L=35		ロッカクボルト M6 L=35	1
77		B8151-771-000	PEDAL		Zキャクヨー ペダル	1
78		B8152-771-000	PEDAL MAT		ペダルマット	1
79		B8153-771-000	PEDAL CONNECTING ROD		ペダルシク	1
80		PJ-3040651-01	ELBOW UNION 6XPT1/8		エルボユニオン 6XPT1/8	1
81		G5462-116-000	TUBE HOSE, BLACK		チューブホース クロ	1.8

4. CLAMP FOOT COMPONENTS (1)
大押エ関係（1）

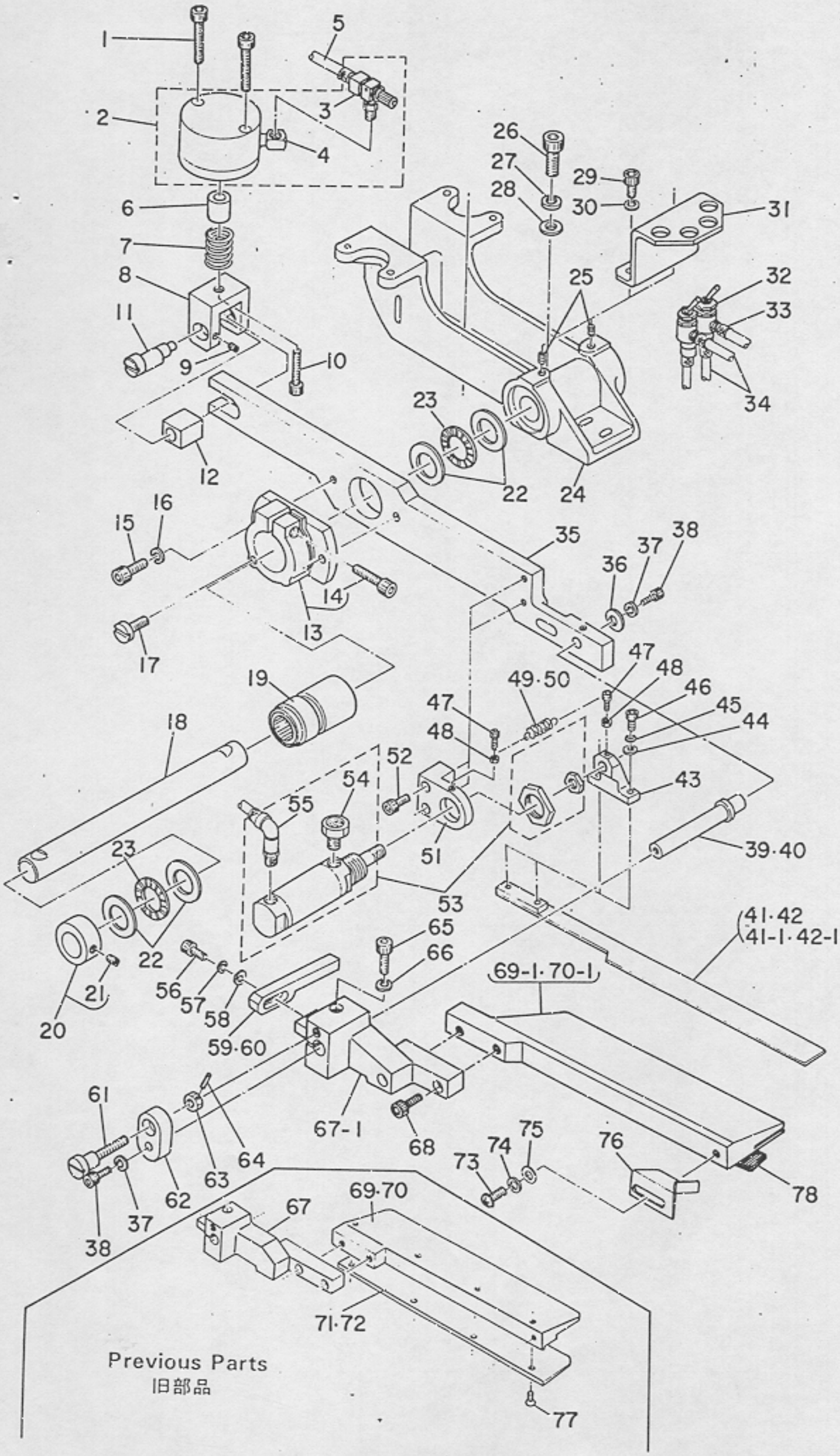

Ref. No.	Note 注記	Part No. 品番	Description	E. C. 変更年月	品名	Amt. Req. 数量
1		SM-6054002-TP	SCREW M5X0.8 L=40		ﾛｯｶｸｱﾅﾎﾞﾙﾄ	2
2		G5401-116-AA0	CLAMP FOOT CYLINDER ASM.		ﾀｲｵｻｴ ｼﾖｳｺｰ ｼﾘﾝﾀﾞｰ ｸﾐ	1
3		PC-0151020-00	SPEED CONTROLLER		ｽﾋﾟｰﾄﾞ ｺﾝﾄﾛｰﾗ	(1)
4		G5453-116-000	PT ELBOW		PT ｴﾙﾎﾞ	(1)
5		G5464-116-000	TUBE HOSE, GREEN		ﾁｭｰﾌﾞﾎｰｽ ﾐﾄﾞﾘ	1.4
6		G5115-116-C00	COLLAR		ｶﾗｰ	1
7		G5114-116-A00	PRESSURE SPRING		ｱﾂｼｭｸﾊﾞﾈ	1
8		G5115-116-B00	CYLINDER BRACKET		ﾀﾞｲｵｻｴｼｮｺｳ ｼﾘﾝﾀﾞｰﾌﾞﾗｹｯﾄ	1
9		SM-8040502-TP	SCREW M4X0.7 L=5		ﾄﾒﾈｼﾞ M4X0.7 L=5	1
10		SM-6063002-TP	SCREW M6 L=30		ﾛｯｶｸｱﾅﾎﾞﾙﾄ	1
11		G5133-116-A00	ECCENTRIC PIN		ｴｷｾﾝﾋﾟﾝ	1
12		G5113-116-A00	SLIDING BLOCK		ｽﾗｲﾄﾞﾒﾀﾙ	1
13		G5106-116-AA0	ARM BRACKET ASM., LEFT		ｱｰﾑｺﾃｲ ﾌﾞﾗｹｯﾄ ﾋﾀﾞﾘ	1
14		SM-6063002-TP	SCREW M6 L=30		ﾛｯｶｸｱﾅﾎﾞﾙﾄ	(1)
15		SM-6062002-TP	SCREW M6 L=20		ﾛｯｶｸｱﾅﾎﾞﾙﾄ M6 L=20	2
16		WS-0610002-KN	SPRING WASHER 6.1X12.2X1.5		ﾊﾞﾈｻﾞｶﾞﾈ M6	2
17		G5111-116-A00	SCREW		ﾀﾞｲｵｻｴ ｱｰﾑﾖｳ ｽﾗｲﾄﾞﾈｼﾞ	1
18		G5102-116-A00	SUPPORT SHAFT		ﾀﾞｲｵｻｴ ｼｼﾞｼﾞｸ	1
19		G5112-116-AA0	HOUSING ASM.		ﾀﾞｲｵｻｴ ﾊｳｼﾞﾝｸﾞ ｸﾐ	1
20		G5109-116-0A0	COLLAR ASM.		ｺﾃｰｶﾗｰ ｸﾐ	1
21		SM-8060602-TP	SCREW M8X6		ﾄﾒﾈｼﾞ M6 L=6	(1)
22		G5805-116-000	THRUST WASHER		ｽﾗｽﾄﾜｯｼｬ	4
23		G5804-116-000	THRUST NEEDLE BEARING		ｽﾗｽﾄ ﾆｰﾄﾞﾙﾍﾞｱﾘﾝｸﾞ	2
24		G5101-116-A00	CLAMP FOOT BASE		ﾀﾞｲｵｻｴﾀﾞｲ	1
25		SM-8061002-TP	SCREW M6 L=10		ﾄﾒﾈｼﾞ M6 L=10	2
26		SM-6082502-TP	SCREW M8 L=25		ﾛｯｶｸｱﾅﾎﾞﾙﾄ	2
27		WS-0820002-KN	SPRING WASHER M8		ﾊﾞﾈｻﾞｶﾞﾈ M8	2
28		WP-0841600-SC	WASHER		ﾋﾗｻﾞｶﾞﾈ	2
29		SM-6061002-TP	SCREW M6 L=10		ﾛｯｶｸｱﾅﾎﾞﾙﾄ M6 L=10	2
30		WS-0610002-KN	SPRING WASHER 6.1X12.2X1.5		ﾊﾞﾈｻﾞｶﾞﾈ M6	2
31		G5103-116-A00	MECHANICAL VALVE BASE		ﾒｶﾆｶﾙﾊﾞﾙﾌﾞ ﾄﾘﾂｹｶﾅｸﾞ	1
32		G5420-116-A00	MECHANICAL VALVE		ﾒｶﾆｶﾙﾊﾞﾙﾌﾞ	2
33		G5411-116-000	HOSE NIPPLE		ﾎｰｽﾆｯﾌﾟﾙ	4
34		BT-0600400-EC	TUBE HOSE, BLUE		ｳﾚﾀﾝﾎｰｽ ｱｵ	3.7
35		G5101-119-000	CLAMP FOOT ARM, LEFT		ﾀﾞｲｵｻｴｱｰﾑ ﾋﾀﾞﾘ	1
36		G5108-119-000	WASHER		ﾜｯｼｬ A	1
37		WS-0510002-KN	SPRING WASHER 5.1X8.5X1.3		ﾊﾞﾈｻﾞｶﾞﾈ 5.1X9.2X1.3	2
38		SM-6051202-TP	SCREW M5X0.8 L=12		ﾛｯｶｸｱﾅﾎﾞﾙﾄ M5X0.8 L=12	2
39	◇01	G5146-119-A00	SLIDING SHAFT A		ｵｵｵｻｴｼｼﾞｱﾑ ｽﾗｲﾄﾞｼﾞｸ A	1
40	◇02	G5146-119-B00	SLIDING SHAFT B		ｵｻｴｼｼﾞｱｰﾑ ｽﾗｲﾄﾞｼﾞｸ B	1
41	◇01	G5121-119-A00	FOLDING PLATE, LEFT A	D.12/83	ｵﾘｺﾐｲﾀ ﾋﾀﾞﾘ A	-
41-1	◇01	G5121-119-A00-A	FOLDING PLATE, LEFT A	A.12/83	ｵﾘｺﾐｲﾀ ﾋﾀﾞﾘ A	1
42	◇02	G5121-119-B00	FOLDING PLATE, LEFT B	D.12/83	ｵﾘｺﾐｲﾀ ﾋﾀﾞﾘ (ﾘﾖｳﾀﾏB)	-
42-1	◇02	G5121-119-B00-A	FOLDING PLATE, LEFT B	A.12/83	ｵﾘｺﾐｲﾀ ﾋﾀﾞﾘ B	1
43		G5132-116-B00	FOLDING BRACKET		ｵﾘｺﾐﾌﾞﾗｹｯﾄ	1
44		WP-0430800-SC	WASHER 4.3X8X0.8		ﾋﾗｻﾞｶﾞﾈ ｺｶﾞﾀﾏﾙ M4	2
45		WS-0410002-KN	SPRING WASHER M4		ﾊﾞﾈｻﾞｶﾞﾈ M4	2
46		SM-6041002-TP	SCREW M4 L=10		ﾛｯｶｸｱﾅﾎﾞﾙﾄ M4X0.7 L=10	2
47		SM-6031202-TP	SCREW M3X0.5 L=12		ﾛｯｶｸｱﾅﾎﾞﾙﾄ	2
48		NM-6030001-SC	NUT M3		ﾛｯｶｸﾅｯﾄ M3X0.5 1ｼｭ	2
49	◇01	G5129-116-C00	FOLDING PLATE SPRING C		ｵﾘｺﾐｲﾀ ﾋｷﾊﾞﾈ C	1
50	◇02	G5129-116-D00	FOLDING PLATE SPRING D		ｵﾘｺﾐｲﾀ ﾋｷﾊﾞﾈ D	1
51		G5119-116-C00	FOLDING CYLINDER BRACKET, LEFT		ｵﾘｺﾐｼﾘﾝﾀﾞｰ ﾌﾞﾗｹｯﾄ ﾋﾀﾞﾘ	1
52		SM-6051402-TP	SCREW M5X0.8 L=14		ﾛｯｶｸｱﾅﾎﾞﾙﾄ	2
53		G5402-116-AA0	WELT PATCH FOLDING CYL. ASM.		ｵﾘｺﾐ ｼﾘﾝﾀﾞｰ ｸﾐ	1
54		PX-0551010-00	ELEMENT		ｴﾚﾒﾝﾄ ﾄﾘﾂｹﾆｯﾌﾟﾙ	(1)
55		PJ-3040651-01	ELBOW UNION 6XPT1/8		ｴﾙﾎﾞﾕﾆｵﾝ 6XPT1/8	(1)
56		SM-6041202-TP	SCREW M4X0.7 L=12		ﾛｯｶｸｱﾅﾎﾞﾙﾄ	1
57		WS-0410002-KN	SPRING WASHER M4		ﾊﾞﾈｻﾞｶﾞﾈ M4	1
58		WP-0430800-SC	WASHER 4.3X8X0.8		ﾋﾗｻﾞｶﾞﾈ ｺｶﾞﾀﾏﾙ M4	1
59	◇01	G5131-116-C00	FOLDING PLATE STOPPER, LEFT		ｵﾘｺﾐｲﾀ ｽﾄｯﾊﾟｰ ﾋﾀﾞﾘ	1
60	◇02	G5131-116-D00	FOLDING PLATE STOPPER, LEFT A		ｵﾘｺﾐｲﾀ ｽﾄｯﾊﾟｰ ﾋﾀﾞﾘ A	1
61		G5105-119-000	HINGE SCREW		ｽﾗｲﾄﾞﾖｰﾈｼﾞ	1
62		G5109-119-000	SLIDING METAL		ｼｼﾞｱｰﾑ ｽﾗｲﾄﾞｲﾀ	1
63		NM-6060001-SC	NUT M6		ﾛｯｶｸﾅｯﾄ M6 1ｼｭ	1
64		PS-0200102-KH	SPRING PIN 2.0X10		ｽﾌﾟﾘﾝｸﾞﾋﾟﾝ 2.0X10	1
65		SM-6062002-TP	SCREW M6 L=20		ﾛｯｶｸｱﾅﾎﾞﾙﾄ M6 L=20	1
66		WS-0610002-KN	SPRING WASHER 6.1X12.2X1.5		ﾊﾞﾈｻﾞｶﾞﾈ M6	1
67	*	G5103-119-000	CLAMP FOOT SUPPORT ARM, LEFT	D.12/83	ﾀﾞｲｵｻｴ ｼｼﾞｱｰﾑ ﾋﾀﾞﾘ	-
67-1	*	G5103-119-000-A	CLAMP FOOT SUPPORT ARM, LEFT	A.12/83	ｵｰｵｻｴ ｼｼﾞ ｱｰﾑ ﾋﾀﾞﾘ	1
68		SM-6061602-TP	SCREW M6 L=16		ﾛｯｶｸｱﾅﾎﾞﾙﾄ	2
69	◇01	G5137-119-A00	FLAP BASE PLATE, LEFT A	D.12/83	ﾌﾗｯﾌﾟﾍﾞｰｽ	-
69-1	◇01	G5137-119-A00-A	GARMENT CLAMP PLATE, LEFT A	A.12/83	ﾐｺﾞﾛ ｸﾗﾝﾌﾟ ﾋﾀﾞﾘ A	1
70	◇02	G5137-119-B00	FLAP BASE PLATE, LEFT B	D.12/83	ﾌﾗｯﾌﾟﾍﾞｰｽ ﾋﾀﾞﾘ (ﾘﾖｳﾀﾏB)	-
70-1	◇02	G5137-119-B00-A	GARMENT CLAMP PLATE, LEFT B	A.12/83	ﾐｺﾞﾛ ｸﾗﾝﾌﾟ ﾋﾀﾞﾘ B	1
71	◇01	G5134-119-A00	GARMENT CLAMP PLATE A	D.12/83	ﾐｺﾞﾛｸﾗﾝﾌﾟ ﾋﾀﾞﾘ A	-
72	◇02	G5135-119-D00	GARMENT CLAMP PLATE B	D.12/83	ﾐｺﾞﾛｸﾗﾝﾌﾟ ﾐｷﾞ (ﾘﾖｳﾀﾏB)	-
73		SM-3030601-SC	SCREW M3X0.5 L=6		ﾏﾙｺﾈｼﾞ	1
74		WS-0310002-KN	SPRING WASHER 3.1X5.9X0.7		ﾊﾞﾈｻﾞｶﾞﾈ 3.1X5.9X0.7	1
75		WP-0320500-SC	WASHER 3.2X7.0X0.5		ﾋﾗｻﾞｶﾞﾈ ｺｶﾞﾀﾏﾙ M3	1
76		G5106-119-000	WELTING PATCH BASE, LEFT		ﾀﾏｽﾞﾍﾞｰｽ ﾋﾀﾞﾘ	1
77	*	SM-1040601-SC	SCREW M4X0.7 L=6	D.12/83	ｻﾗｺﾈｼﾞ M4X0.7 L=6	-
78	◇03	G5152-119-A00	RUBBER SOLE, LEFT A		ﾐｺﾞﾛｸﾗﾝﾌﾟｺﾞﾑ A	1

Note (注記) ◇01 ..... For 9.5, 10, 12, 14 mm — 9.5、10、12、14mm用
◇02 ..... For 16, 18, 20 mm — 16、18、20mm用
◇03 ..... Selective part — 選択部品
(Refer to the table on page 49.) — (49ページの表をご参照下さい。)

5. CLAMP FOOT COMPONENTS (2)
大押エ関係（2）

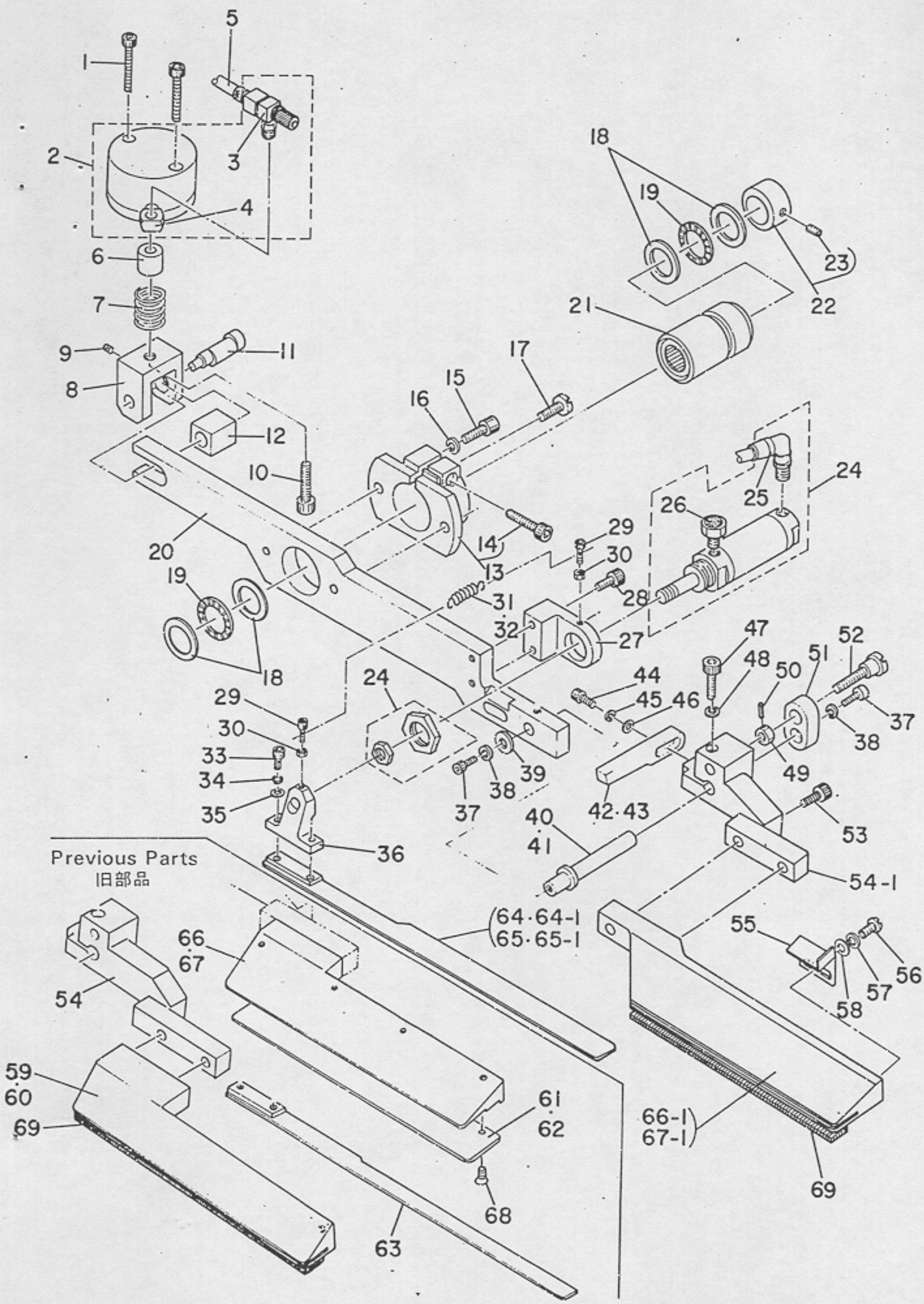

Ref. No.	Note 注記	Part No. 品番	Description	E. C. 変更年月	品名	Amt. Req. 数量
1		SM-6054002-TP	SCREW M5X0.8 L=40		ﾛﾂｶｸｱﾅﾎﾞﾙﾄ	2
2		G5401-116-AA0	CLAMP FOOT CYLINDER ASM.		ﾀｲｵｻｴ ｼｮｳｺｰ ｼﾘﾝﾀﾞｰ ｸﾐ	1
3		PC-0151020-00	SPEED CONTROLLER		ｽﾋﾟｰﾄﾞ ｺﾝﾄﾛｰﾗ	(1)
4		G5453-116-000	PT ELBOW		PT ｴﾙﾎﾞ	(1)
5		G5460-116-000	TUBE HOSE, RED		ﾁｭｰﾌﾞﾎｰｽ ｱｶ	1.4
6		G5115-116-C00	COLLAR		ｶﾗｰ	1
7		G5114-116-A00	PRESSURE SPRING		ｱﾂｼｭｸﾊﾞﾈ	1
8		G5115-116-B00	CYLINDER BRACKET		ﾀｲｵｻｴｼｮｺｳ ｼﾘﾝﾀﾞｰﾌﾞﾗｹｯﾄ	1
9		SM-8040502-TP	SCREW M4X0.7 L=5		ﾄﾒﾈｼﾞ M4X0.7 L=5	1
10		SM-6063002-TP	SCREW M6 L=30		ﾛﾂｶｸｱﾅﾎﾞﾙﾄ	1
11		G5133-116-A00	ECCENTRIC PIN		ｴｷｾﾝﾋﾟﾝ	1
12		G5113-116-A00	SLIDING BLOCK		ｽﾗｲﾄﾞﾒﾀﾙ	1
13		G5106-116-BA0	ARM BRACKET ASM., RIGHT		ｱｰﾑｺﾃｲ ﾌﾞﾗｹｯﾄ ﾐｷﾞ ｸﾐ	1
14		SM-6063002-TP	SCREW M6 L=30		ﾛﾂｶｸｱﾅﾎﾞﾙﾄ	(1)
15		SM-6062002-TP	SCREW M6 L=20		ﾛﾂｶｸｱﾅﾎﾞﾙﾄ M6 L=20	2
16		WS-0610002-KN	SPRING WASHER 6.1X12.2X1.5		ﾊﾞﾈｻﾞｶﾞﾈ M6	2
17		G5111-116-A00	SCREW		ﾀﾞｲｵｻｴ ｱｰﾑﾖｳ ｽﾗｲﾄﾞﾈｼﾞ	1
18		G5805-116-000	THRUST WASHER		ｽﾗｽﾄﾜｯｼｬ	4
19		G5804-116-000	THRUST NEEDLE BEARING		ｽﾗｽﾄ ﾆｰﾄﾞﾙﾍﾞｱﾘﾝｸﾞ	2
20		G5102-119-000	CLAMP FOOT ARM, RIGHT		ﾀﾞｲｵｻｴｱｰﾑ ﾐｷﾞ	1
21		G5112-116-AA0	HOUSING ASM.		ﾀﾞｲｵｻｴ ﾊｳｼﾞﾝｸﾞ ｸﾐ	1
22		G5109-116-0A0	COLLAR ASM.		ｺﾃｰｶﾗｰ ｸﾐ	1
23		SM-8060602-TP	SCREW M8X6		ﾄﾒﾈｼﾞ M6 L=6	(1)
24		G5402-116-AA0	WELT PATCH FOLDING CYL. ASM.		ｵﾘｺﾐ ｼﾘﾝﾀﾞｰ ｸﾐ	1
25		PJ-3040651-01	ELBOW UNION 6XPT1/8		ｴﾙﾎﾞﾕﾆｵﾝ 6XPT1/8	(1)
26		PX-0551010-00	ELEMENT		ｴﾚﾒﾝﾄ ﾄﾘﾂｹﾆﾌﾞﾙ	(1)
27		G5119-116-D00	FOLDING CYLINDER BRACKET,RIGHT		ｵﾘｺﾐｼﾘﾝﾀﾞｰ ﾌﾞﾗｹｯﾄ ﾐｷﾞ	1
28		SM-6051402-TP	SCREW M5X0.8 L=14		ﾛﾂｶｸｱﾅﾎﾞﾙﾄ	2
29		SM-6031202-TP	SCREW M3X0.5 L=12		ﾛﾂｶｸｱﾅﾎﾞﾙﾄ	2
30		NM-6030001-SC	NUT M3		ﾛﾂｶｸﾅﾂﾄ M3X0.5 1ｼｭ	2
31	◇01	G5129-116-C00	FOLDING PLATE SPRING C		ｵﾘｺﾐｲﾀ ﾋｷﾊﾞﾈ C	1
32	◇02	G5129-116-D00	FOLDING PLATE SPRING D		ｵﾘｺﾐｲﾀ ﾋｷﾊﾞﾈ D	1
33		SM-6041002-TP	SCREW M4 L=10		ﾛﾂｶｸｱﾅﾎﾞﾙﾄ M4X0.7 L=10	2
34		WS-0410002-KN	SPRING WASHER M4		ﾊﾞﾈｻﾞｶﾞﾈ M4	2
35		WP-0430800-SC	WASHER 4.3X8X0.8		ﾋﾗｻﾞｶﾞﾈ ｺｶﾞﾀﾏﾙ M4	2
36		G5132-116-B00	FOLDING BRACKET		ｵﾘｺﾐﾌﾞﾗｹｯﾄ	1
37		SM-6051202-TP	SCREW M5X0.8 L=12		ﾛﾂｶｸｱﾅﾎﾞﾙﾄ M5X0.8 L=12	2
38		WS-0510002-KN	SPRING WASHER 5.1X8.5X1.3		ﾊﾞﾈｻﾞｶﾞﾈ 5.1X9.2X1.3	2
39		G5108-119-000	WASHER		ﾜｯｼｬ A	1
40	◇01	G5146-119-A00	SLIDING SHAFT A		ｵｵｵｻｴｼﾞｱﾑ ｽﾗｲﾄﾞｼﾞｸ A	1
41	◇02	G5146-119-B00	SLIDING SHAFT B		ｵｻｴｼﾞｱｰﾑ ｽﾗｲﾄﾞｼﾞｸ B	1
42	◇01	G5130-116-C00	FOLDING PLATE STOPPER, RIGHT		ｵﾘｺﾐｲﾀ ｽﾄｯﾊﾟｰ ﾐｷﾞ	1
43	◇02	G5130-116-D00	FOLDING PLATE STOPPER, RIGHT A		ｵﾘｺﾐｲﾀ ｽﾄｯﾊﾟｰ ﾐｷﾞ A	1
44		SM-6041202-TP	SCREW M4X0.7 L=12		ﾛﾂｶｸｱﾅﾎﾞﾙﾄ	1
45		WS-0410002-KN	SPRING WASHER M4		ﾊﾞﾈｻﾞｶﾞﾈ M4	1
46		WP-0430800-SC	WASHER 4.3X8X0.8		ﾋﾗｻﾞｶﾞﾈ ｺｶﾞﾀﾏﾙ M4	1
47		SM-6062002-TP	SCREW M6 L=20		ﾛﾂｶｸｱﾅﾎﾞﾙﾄ M6 L=20	1
48		WS-0610002-KN	SPRING WASHER 6.1X12.2X1.5		ﾊﾞﾈｻﾞｶﾞﾈ M6	1
49		NM-6060001-SC	NUT M6		ﾛﾂｶｸﾅﾂﾄ M6 1ｼｭ	1
50		PS-0200102-KH	SPRING PIN 2.0X10		ｽﾌﾟﾘﾝｸﾞﾋﾟﾝ 2.0X10	1
51		G5109-119-000	SLIDING METAL		ｼｼﾞｱｰﾑ ｽﾗｲﾄﾞｲﾀ	1
52		G5105-119-000	HINGE SCREW		ｽﾗｲﾄﾞﾖｰﾈｼﾞ	1
53		SM-6061602-TP	SCREW M6 L=16		ﾛﾂｶｸｱﾅﾎﾞﾙﾄ	2
54	*	G5104-119-000	CLAMP FOOT SUPPORT ARM, RIGHT	D.12/83	ﾀﾞｲｵｻｴ ｼｼﾞｱｰﾑ ﾐｷﾞ	-
54-1	*	G5104-119-000-A	CLAMP FOOT SUPPORT ARM, RIGHT	A.12/83	ｵｰｵｻｴ ｼｼﾞ ｱｰﾑ ﾐｷﾞ	1
55		G5107-119-000	WELTING PATCH BASE, RIGHT		ﾀﾏｽﾉﾍﾞｰｽ ﾐｷﾞ	1
56		SM-3030601-SC	SCREW M3X0.5 L=6		ﾏﾙｺﾈｼﾞ	1
57		WS-0310002-KN	SPRING WASHER 3.1X5.9X0.7		ﾊﾞﾈｻﾞｶﾞﾈ 3.1X5.9X0.7	1
58		WP-0320500-SC	WASHER 3.2X7.0X0.5		ﾋﾗｻﾞｶﾞﾈ ｺｶﾞﾀﾏﾙ M3	1
59	◇03	G5135-119-A00	GARMENT CLAMP PLATE, RIGHT A	D.12/83	ﾐｺﾞﾛｸﾗﾝﾌﾟﾐｷﾞ ﾍﾝｹｲﾘｮｳﾀﾏA	-
60	◇04	G5135-119-B00	GARMENT CLAMP PLATE, RIGHT B	D.12/83	ﾐｺﾞﾛｸﾗﾝﾌﾟ ﾐｷﾞ(ﾍﾝｹｲﾘｮｳﾀﾏ	-
61	◇01	G5134-119-A00	GARMENT CLAMP PLATE A	D.12/83	ﾐｺﾞﾛｸﾗﾝﾌﾟ ﾋﾀﾞﾘ A	-
62	◇02	G5135-119-D00	GARMENT CLAMP PLATE B	D.12/83	ﾐｺﾞﾛｸﾗﾝﾌﾟ ﾐｷﾞ (ﾘｮｳﾀﾏB)	-
63	◇05	G5120-119-C00	FOLDING PLATE, RIGHT	D.12/83	ｵﾘｺﾐｲﾀ ﾐｷﾞ	-
64	◇01	G5120-119-A00	FOLDING PLATE, RIGHT A	D.12/83	ｵﾘｺﾐｲﾀ ﾐｷﾞ (ﾘｮｳﾀﾏA)	-
64-1	◇01	G5120-119-A00-A	FOLDING PLATE, RIGHT A	A.12/83	ｵﾘｺﾐｲﾀ ﾐｷﾞ A	1
65	◇02	G5120-119-B00	WELT PATCH FOLDING PLATE	D.12/83	ｵﾘｺﾐｲﾀ ﾐｷﾞ (ﾘｮｳﾀﾏB)	-
65-1	◇02	G5120-119-B00-A	FOLDING PLATE, RIGHT B	A.12/83	ｵﾘｺﾐｲﾀ ﾐｷﾞ B	1
66	◇01	G5138-119-A00	FLAP BASE PLATE, RIGHT A	D.12/83	ﾌﾗｯﾌﾟﾍﾞｰｽ ﾐｷﾞ (ﾘｮｳﾀﾏA)	-
66-1	◇01	G5138-119-A00-A	GARMENT CLAMP PLATE, RIGHT A	A.12/83	ﾐｺﾞﾛ ｸﾗﾝﾌﾟ ﾐｷﾞ A	1
67	◇02	G5138-119-B00	FLAP BASE PLATE, RIGHT B	D.12/83	ﾌﾗｯﾌﾟﾍﾞｰｽ ﾐｷﾞ(ﾘｮｳﾀﾏB)	-
67-1	◇02	G5138-119-B00-A	GARMENT CLAMP PLATE, RIGHT B	A.12/83	ﾐｺﾞﾛ ｸﾗﾝﾌﾟ ﾐｷﾞ B	1
68	*	SM-1040601-SC	SCREW M4X0.7 L=6	D.12/83	ｻﾗｺﾈｼﾞ M4X0.7 L=6	-
69	◇06	G5152-119-B00	RUBBER SOLE, RIGHT B		ﾐｺﾞﾛｸﾗﾝﾌﾟ ｺﾞﾑ B	1

Note (注記)
- ◇01 ..... For 9.5, 10, 12, 14 mm — 9.5、10、12、14mm用
- ◇02 ..... For 16, 18, 20 mm — 16、18、20mm用
- ◇03 ..... For varied double welt 9.5, 10, 12, 14 mm — 変形両玉縁 9.5、10、12、14mm用
- ◇04 ..... For varied double welt 16, 18, 20 mm — 変形両玉縁 16、18、20mm用
- ◇05 ..... For varied double welt 9.5, 10 ~ 20 mm — 変形両玉縁 9.5、10～20mm用
- ◇06 ..... Selective part — 選択部品

(Refer to the table on page 49.) (49ページの表をご参照下さい)

6. RAPID FEED COMPONENTS (1)
縫製送り関係（1）

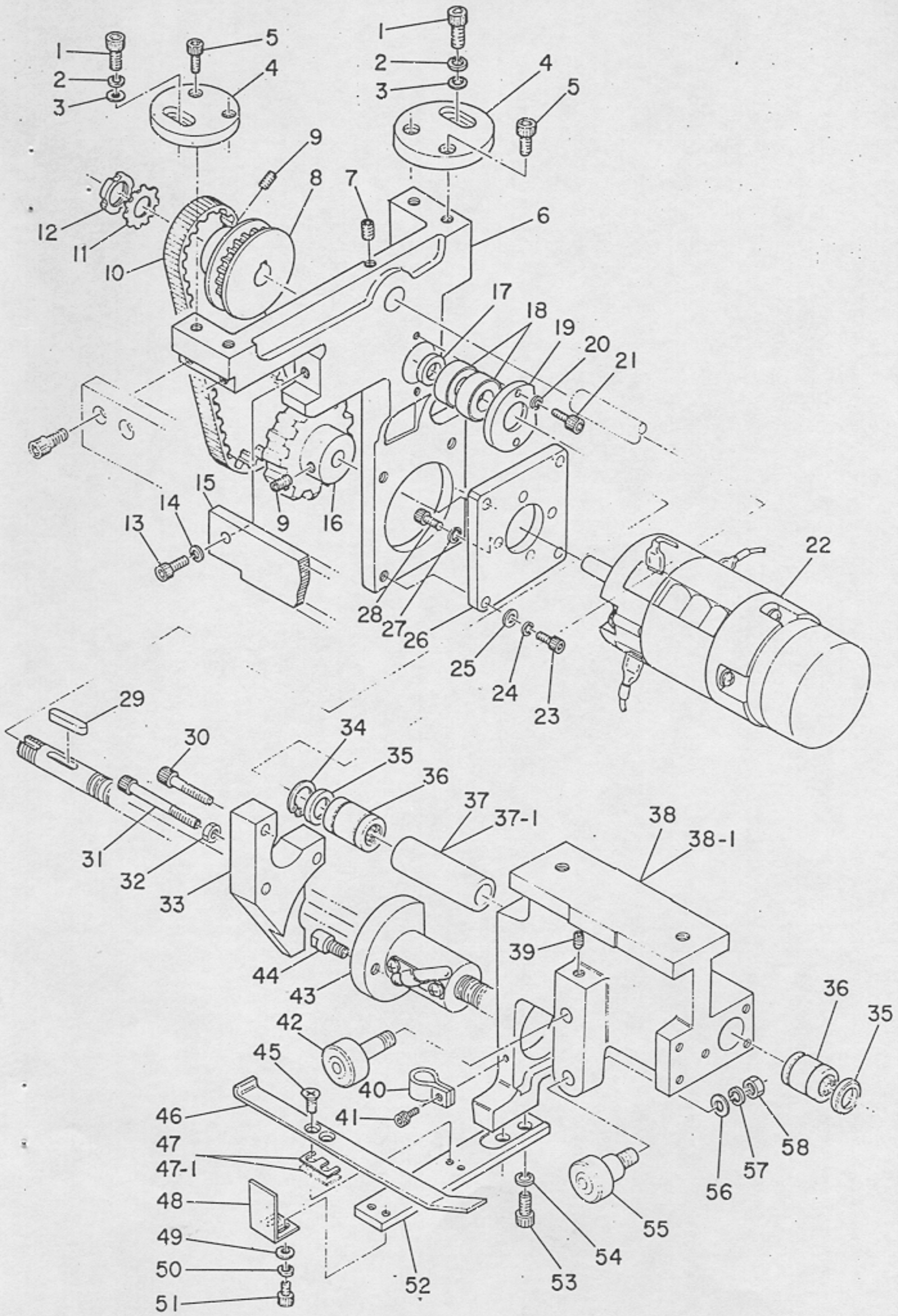

Ref. No.	Note 注記	Part No. 品番	Description	E. C. 変更年月	品名	Amt. Req. 数量
1		SM-6063002-TP	SCREW M6 L=30		ﾛｯｶｸｱﾅﾎﾞﾙﾄ	2
2		WS-0610002-KN	SPRING WASHER 6.1X12.2X1.5		ﾊﾞﾈｻﾞｶﾞﾈ M6	2
3		WP-0841600-SC	WASHER		ﾋﾗｻﾞｶﾞﾈ	2
4		G5207-119-000	FRAME FASTENER A		ﾜﾝﾄﾘｯﾂｹﾞ A	2
5		SM-6082002-TP	SCREW M8 L=20		ﾛｯｶｸｱﾅﾎﾞﾙﾄ	4
6		G5203-119-000	SERVOMOTOR BASE		ｻｰﾎﾞﾓｰﾀﾀﾞｲ	1
7		SM-8061202-TP	SCREW M6 L=12		ﾄﾒﾈｼﾞ	1
8		G5210-119-000	TIMING PULLEY		ﾀｲﾐﾝｸﾞﾌﾟｰﾘ	1
9		SM-8050602-TP	SCREW M5 L=6		ﾄﾒﾈｼﾞ M5X0.8 L=6	2
10		G5221-119-000	TIMING BELT		ﾀｲﾐﾝｸﾞﾍﾞﾙﾄ	1
11		G5802-116-000	DISMOUNTING WASHER		ﾃﾞｲｽﾏｳﾝﾃﾝｸﾞ ｻﾞｶﾞﾈ	1
12		G5801-116-000	DISMOUNTING NUT		ﾃﾞｲｽﾏｳﾝﾃﾝｸﾞ ﾅｯﾄ	1
13		SM-6082502-TP	SCREW M8 L=25		ﾛｯｶｸｱﾅﾎﾞﾙﾄ	1
14		WS-0820002-KN	SPRING WASHER M8		ﾊﾞﾈｻﾞｶﾞﾈ M8	1
15		G5205-119-000	GUIDE RAIL		ｶｰﾄﾞﾚｰﾙ	1
16		G5209-119-000	TIMING PULLEY		ﾀｲﾐﾝｸﾞﾌﾟｰﾘ	1
17		G5211-116-000	COLLAR, D=20		ｶﾗｰ	1
18		G5809-116-000	ANGULAR CONTACT BALL BEARING		ｱﾝｷﾞｭﾗ ﾀﾏｼﾞｸｳｹ	2
19		G5210-116-000	BEARING CAP		ﾍﾞｱﾘﾝｸﾞ ｷｬｯﾌﾟ	1
20		WS-0510002-KN	SPRING WASHER 5.1X8.5X1.3		ﾊﾞﾈｻﾞｶﾞﾈ 5.1X9.2X1.3	2
21		SM-6051402-TP	SCREW M5X0.8 L=14		ﾛｯｶｸｱﾅﾎﾞﾙﾄ	2
22		HM-0001600-00	SERVOMOTOR		DC ｻｰﾎﾞﾓｰﾀ	1
23		SM-6052002-TP	SCREW M5 L=20		ﾛｯｶｸｱﾅﾎﾞﾙﾄ M5X0.8 L=20	4
24		WS-0510002-KN	SPRING WASHER 5.1X8.5X1.3		ﾊﾞﾈｻﾞｶﾞﾈ 5.1X9.2X1.3	4
25		WP-0531000-SC	WASHER M5		ﾋﾗｻﾞｶﾞﾈ ｺｶﾞﾀﾏﾙ M5	4
26		G5222-119-000	SERVOMOTOR BRACKET		ｻｰﾎﾞﾓｰﾀ ﾌﾞﾗｹｯﾄ	1
27		WS-0410002-KN	SPRING WASHER M4		ﾊﾞﾈｻﾞｶﾞﾈ M4	4
28		SM-6041502-TP	SCREW M4X0.7 L=15		ﾃﾞﾝｼﾞﾍﾞﾝ ﾄﾒﾈｼﾞ	4
29		G5803-116-000	KEY		ｷｰ	1
30		SM-6052002-TP	SCREW M5 L=20		ﾛｯｶｸｱﾅﾎﾞﾙﾄ M5X0.8 L=20	3
31		SM-6054002-TP	SCREW M5X0.8 L=40		ﾛｯｶｸｱﾅﾎﾞﾙﾄ	1
32		NM-6050001-SC	NUT M5		ﾛｯｶｸﾅｯﾄ M5X0.8 1ｼｭ	1
33		G5229-116-A00	FEED PLATE		ｵｸﾘﾌﾟﾚｰﾄ	1
34	*	G5825-116-000	STOP RING	D.07/83	ｱﾅﾖｰ ｽﾄｯﾌﾟﾘﾝｸﾞ	-
35		G5835-116-000	FELT SEAL		LMﾖｰ ﾌｪﾙﾄｼｰﾙ	2
36		G5810-116-000	SLIDE BEARING		ｽﾗｲﾄﾞﾍﾞｱﾘﾝｸﾞ	2
37	*	G5217-116-000	DISTANCE PIESE	D.07/83	ﾃﾞｲｽﾀﾝｽﾋﾟｰｽ	-
37-1	*	G5217-116-000-A	DISTANCE PIESE	A.07/83	ﾃﾞｲｽﾀﾝｽﾋﾟｰｽ	1
38	*	G5216-116-A00	SLIDE CASE	D.07/83	ｽﾗｲﾄﾞｹｰｽ	-
38-1	*	G5216-116-A00-A	SLIDE CASE	A.07/83	ｽﾞﾗｲﾄﾞｹｰｽ	1
39		SM-8061202-TP	SCREW M6 L=12		ﾄﾒﾈｼﾞ	1
40		G5848-116-000	NYLON CLIP		ﾅｲﾛﾝｸﾘｯﾌﾟ	1
41		SM-6040802-TP	SCREW M4X0.7 L=8		ﾛｯｶｸｱﾅﾎﾞﾙﾄ M4X0.7 L=8	1
42		G5821-116-000	CAM FOLLOWER		ｶﾑﾌｫﾛｱｰ A	1
43		G5206-119-000	BALL SCREW		ﾎﾞﾙﾈｼﾞ	1
44		G5228-116-A00	ROTATING STOPPER PIN		ﾏｳﾘﾄﾞﾒﾋﾟﾝ	1
45		SM-1041001-SC	SCREW M4X0.7 L=10		ｻﾗｺﾈｼﾞ M4X0.7 L=10	2
46		G5220-119-000	PLATE		ｳｹｲﾀ	1
47	◇01	G5211-119-A00	SPACER A		ｳｹｲﾀﾄﾘｯﾂｹ ｽﾍﾟｰｻ A	1
47-1	◇01	G5211-119-B00	SPACER B		ｳｹｲﾀﾄﾘｯﾂｹ ｽﾍﾟｰｻ B	1
48		G5219-119-000	POSITIONER		ｷﾝｾﾂｹﾝﾁｲﾀ	1
49		WP-0430800-SC	WASHER 4.3X8X0.8		ﾋﾗｻﾞｶﾞﾈ ｺｶﾞﾀﾏﾙ M4	2
50		WS-0410002-KN	SPRING WASHER M4		ﾊﾞﾈｻﾞｶﾞﾈ M4	2
51		SM-6040802-TP	SCREW M4X0.7 L=8		ﾛｯｶｸｱﾅﾎﾞﾙﾄ M4X0.7 L=8	2
52		G5215-119-000	INSTALLING PLATE		ｳｹｲﾀ ﾄﾘｯｹﾎﾞﾙﾄ	1
53		SM-6051202-TP	SCREW M5X0.8 L=12		ﾛｯｶｸｱﾅﾎﾞﾙﾄ M5X0.8 L=12	2
54		WS-0510002-KN	SPRING WASHER 5.1X8.5X1.3		ﾊﾞﾈｻﾞｶﾞﾈ 5.1X9.2X1.3	2
55		G5822-116-000	ECCENTRIC CAM FOLLOWER		ﾍﾝｼﾝｶﾑﾌｫﾛｱｰ	1
56		WP-1302501-SC	WASHER 13X24X2.5		ﾋﾗｻﾞｶﾞﾈ 13X24X2.5	1
57		WS-1220002-KN	SPRING WASHER		ﾊﾞﾈｻﾞｶﾞﾈ	1
58		NM-6120001-SC	NUT M12		ﾛｯｶｸﾅｯﾄ	1

Note (注記) 001 ..... Selective part　　選択部品

7. RAPID FEED COMPONENTS (2)
縫製送り関係（2）

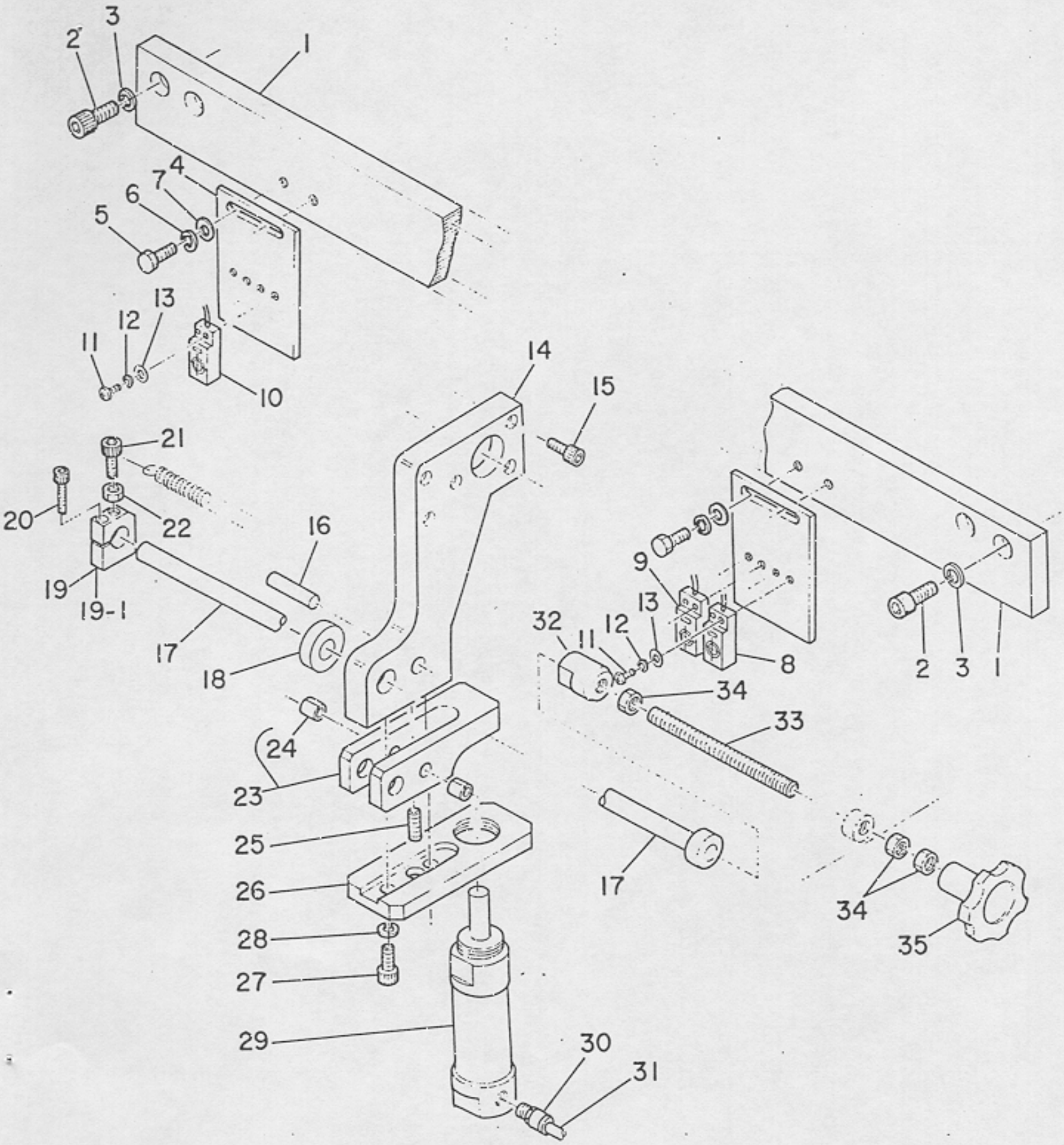

Ref. No.	Note 注記	Part No. 品番	Description	E. C. 変更年月	品名	Amt. Req. 数量
1		G5201-119-000	SUB RAIL		ｻﾌﾞﾚｰﾙ	1
2		SM-6061002-TP	SCREW M6 L=10		ﾛｯｶｸｱﾅﾎﾞﾙﾄ M6 L=10	4
3		WS-0610002-KN	SPRING WASHER 6.1X12.2X1.5		ﾊﾞﾈｻﾞｶﾞﾈ M6	4
4	*	G5218-119-000	SWITCH INSTALLING PLATE C	A.04/83	ｷﾝｾﾂｽｲｯﾁ ﾄﾘﾂｹｲﾀ C	2
5		SM-9051203-SC	SCREW M5X0.8 L=12		ﾛｯｶｸﾎﾞﾙﾄ	4
6		WS-0510002-KN	SPRING WASHER 5.1X8.5X1.3		ﾊﾞﾈｻﾞｶﾞﾈ 5.1X9.2X1.3	4
7		WP-0531000-SC	WASHER M5		ﾋﾗｻﾞｶﾞﾈ ｺｶﾞﾀﾏﾙ M5	4
8		G6505-119-0A0	FRONT SWITCH ASM.		ﾏｴﾊｼ ｽｲｯﾁ ｸﾐ	1
9		G6504-119-0A0	SPEED DECREASING SWITCH ASM.		ﾏｴﾊｼ ｹﾞﾝｿｸ ｽｲｯﾁ ｸﾐ	1
10		G6506-119-0A0	REAR SWITCH ASM.		ｳｼﾛﾊｼ ｽｲｯﾁ ｸﾐ	1
11		SM-3031401-SC	SCREW M3X0.5 L=14		ﾏﾙｺﾈｼﾞ	6
12		WS-0310002-KN	SPRING WASHER 3.1X5.9X0.7		ﾊﾞﾈｻﾞｶﾞﾈ 3.1X5.9X0.7	6
13		WP-0320501-SC	WASHER 3.2X7X0.5		ﾋﾗｻﾞｶﾞﾈ 3.2X7X0.5	6
14		G5219-116-A00	SHAFT CLAMPING BASE		ｼﾞｸｺﾃｲﾀﾞｲ	1
15		SM-6051602-TP	SCREW M5X0.8 L=16		ﾛｯｶｸｱﾅﾎﾞﾙﾄ M5X0.8 L=16	5
16		G5223-116-A00	PIN		ﾋﾟﾝ	1
17		G5212-119-000	CORNER KNIFE FEED SHAFT		ﾒｽﾋﾂﾊﾟﾘﾎﾞｰ	1
18	*	G5214-119-000	RUBBER CUSHION	A.04/83	ﾀﾞﾝﾊﾟｰｺﾞﾑ	1
19	*	G5213-119-000	SPRING ANCHOR COLLAR	0.04/83	ﾊﾞﾈｶｹｶﾗｰ	-
19-1	*	G5213-119-000-A	SPRING ANCHOR COLLAR	A.04/83	ﾊﾞﾈｶｹｶﾗｰ	1
20		SM-6062002-TP	SCREW M6 L=20		ﾛｯｶｸｱﾅﾎﾞﾙﾄ M6 L=20	1
21		SM-6052002-TP	SCREW M5 L=20		ﾛｯｶｸｱﾅﾎﾞﾙﾄ M5X0.8 L=20	1
22		NM-6050001-SC	NUT M5		ﾛｯｶｸﾅｯﾄ M5X0.8 1ｼｭ	1
23		G5224-116-AA0	LOCKING BLOCK ASM.		ﾛｯｸﾌﾞﾛｯｸ ｸﾐ	1
24		G5817-116-B00	DRY METAL		ﾄﾞﾗｲﾒﾀﾙ	(2)
25		SM-8061402-TP	SCREW M6 L=14		ﾄﾒﾈｼﾞ	1
26		G5235-116-A00	SHAFT HELD CYLINDER BASE		ｴｱｰｼﾘﾝﾀﾞﾀﾞｲ	1
27		SM-6061402-TP	SCREW M6 L=14		ﾛｯｶｸｱﾅﾈｼﾞ M6 L=14	2
28		WS-0610002-KN	SPRING WASHER 6.1X12.2X1.5		ﾊﾞﾈｻﾞｶﾞﾈ M6	2
29		G5404-116-0A0	SHAFT HELD CYLINDER ASM.		ｼﾞｸｺﾃｲｼﾞｮｳ ｼﾘﾝﾀﾞｰ ｸﾐ	1
30		PJ-3010651-03	HALF UNION 6XPT1/8		ﾊｰﾌﾕﾆｵﾝ	1
31		G5460-116-000	TUBE HOSE, RED		ﾁｭｰﾌﾞﾎｰｽ ｱｶ	1
32		G5234-116-000	STOPPER		ｽﾄｯﾊﾟｰ	1
33		G5216-119-000	SCREW STUD		ﾈｼﾞﾎﾞｰ	1
34		NM-6080001-SC	NUT M8X1.25		ﾛｯｶｸﾅｯﾄ M8 1ｼｭ	3
35		G5836-116-0C0	KNOB		ｴﾝﾌﾟﾗﾉﾌﾞ	1

8. RAPID FEED & CORNER KNIFE COMPONENTS (1)
縫製送り・コーナーメス関係（1）

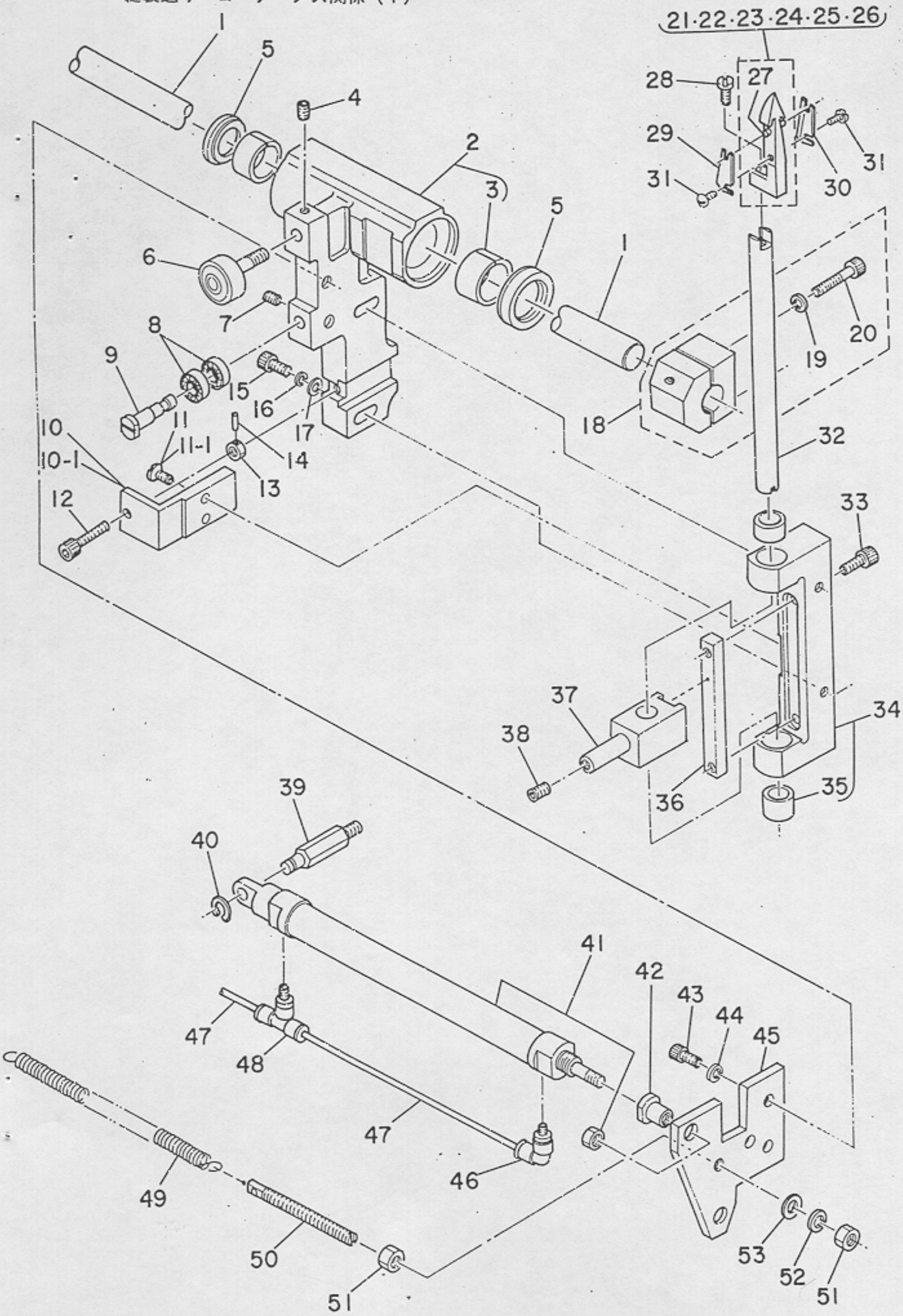

Ref. No.	Note 注記	Part No. 品番	Description	E. C. 変更年月	品名	Amt. Req. 数量
1		G5204-119-000	STRAIGHT SHAFT		リニアシャフト	1
2		G5218-116-AA0	SLIDE BASE ASM.		スライトメタルタイ クミ	1
3		G5817-116-000	DRY BEARING		トライベアリング C	(2)
4		SM-8061202-TP	SCREW M6 L=12		トメネジ	1
5		G5835-116-000	FELT SEAL		LMヨー フエルトシール	2
6		G5821-116-000	CAM FOLLOWER		カムフオロアー A	1
7		SM-8050802-TP	SCREW M5X0.8 L=8		トメネジ M5X0.8 L=8	1
8		G5808-116-000	RADIAL BALL BEARING		ラジアルボール ベアリング B	2
9		G5230-116-000	ECCENTRIC PIN		エキセンピン	1
10	*	G5245-116-000	ADJUSTING CLAMP	D.07/83	アジヤストカナク	-
10-1	*	G5245-116-000-A	ADJUSTING CLAMP	A.07/83	アジヤストカナク	1
11	*	SM-1041201-SC	SCREW M4 L=12	D.07/83	サラコネジ M4X0.7 L=12	-
11-1	*	SM-6040802-TP	SCREW M4X0.7 L=8	A.07/83	ロツカクアナボルト M4X0.7 L=8	2
12		SM-6063002-TP	SCREW M6 L=30		ロツカクアナボルト	1
13		NM-6060001-SC	NUT M6		ロツカクナツト M6 1シュ	1
14		PS-0200102-KH	SPRING PIN 2.0X10		スプリングピン 2.0X10	1
15		SM-6063502-TP	SCREW M6 L=35		ロツカクアナボルト	2
16		WS-0610002-KN	SPRING WASHER 6.1X12.2X1.5		ハネワカネ M6	2
17		WP-0641601-SC	WASHER		ヒラワカネ ミカキマル M6	2
18	◇01	G5263-119-0A0	SPLIT COLLAR ASM.	D.01/84	ワリカラー クミ	-
19	*	WS-0310002-KN	SPRING WASHER 3.1X5.9X0.7	D.01/84	ハネワカネ 3.1X5.9X0.7	-
20	*	SM-6032502-TP	SCREW M3X0.5 L=25	D.01/84	ロツカクアナボルト	-
21	◇02	G5246-116-AA0	KNIFE HOLDER ASM. 10MM		メスホルダー 10ミリ クミ	1
22	◇03	G5246-116-BA0	KNIFE HOLDER ASM. 12MM		メスホルダー 12ミリ クミ	1
23	◇04	G5225-119-AA0	KNIFE HOLDER ASM. 14MM		メスホルダ クミ 14	1
24	◇05	G5225-119-BA0	KNIFE HOLDER ASM. 16MM		メスホルダ クミ 16	1
25	◇06	G5225-119-CA0	KNIFE HOLDER ASM. 18MM		メスホルダ クミ 18	1
26	◇07	G5225-119-DA0	KNIFE HOLDER ASM. 20MM		メスホルダ クミ 20	1
27		G5830-116-000	SPRING PIN		メスホルダーピン	(1)
28		SS-6111610-SP	SCREW 11/64-40 L=16		ヒラネジ 11/64-40 L=16	1
29		G5252-116-A00	CORNER KNIFE 1		コーナーメス 1	1
30		G5253-116-A00	CORNER KNIFE 2		コーナーメス 2	1
31		SS-5060410-SP	SCREW 3/32-56 L=3.5		トラスネジ 3/32-56 L=3.5	2
32		G5243-116-000	LIFTING ROD		ショーコーロツト	1
33		SM-6041502-TP	SCREW M4X0.7 L=15		テンシベン トメネジ	2
34		G5241-116-0A0-A	CORNER KNIFE SHAFT BASE ASM.		イトーサンカクメス シクタイ クミ	1
35		G5247-116-000	BUSHING		メスホルダーブツシュ	(2)
36		G5242-116-000-A	SLIDE PLATE		シユートーイタ	1
37		G5244-116-000	ROD BOSS		ロツトボス	1
38		SM-8082002-TP	SCREW M8 L=20		トメネジ M8 L=20	1
39		G5209-116-000	CYLINDER INSTALLATION PIN		シリンダ マウントピン	1
40		G5824-116-000	STOP RING		ストツプリング	1
41		G5406-116-AA0	KNIFE RETURNING CYLINDER ASM.		コーナーメス モトシリンダ クミ	1
42		G5226-116-000	CYLINDER EDGE		シリンダエツジ	1
43		SM-6062502-TP	SCREW M6 L=25		ロツカクアナボルト M6 L=25	2
44		WS-0610002-KN	SPRING WASHER 6.1X12.2X1.5		ハネワカネ M6	2
45		G5222-116-000-A	DRIVING PLATE		サトプレート	1
46		PJ-3040651-01	ELBOW UNION 6XPT1/8		エルボユニオン 6XPT1/8	1
47		G5462-116-000	TUBE HOSE, BLACK		チユーブホース クロ	1
48		PJ-3050651-02	DOUBLE-ENDED TEE UNION		リヨウクチ チースユニオン	1
49		G5231-116-000	SPRING		ヒキモトシバネ	1
50		G5261-116-000	SPRING ANCHOR		バネカケ	1
51		NM-6060001-SC	NUT M6		ロツカクナツト M6 1シュ	2
52		WS-0610002-KN	SPRING WASHER 6.1X12.2X1.5		ハネワカネ M6	1
53		WP-0641601-SC	WASHER		ヒラワカネ ミカキマル M6	1

Note (注記)

◇01	For 14, 16, 18, 20 mm	14、16、18、20mm用
◇02	For 9.5, 10 mm	9.5、10mm用
◇03	For 12 mm	12mm用
◇04	For 14 mm	14mm用
◇05	For 16 mm	16mm用
◇06	For 18 mm	18mm用
◇07	For 20 mm	20mm用

9. RAPID FEED & CORNER KNIFE COMPONENTS (2)
縫製送り・コーナーメス関係（2）

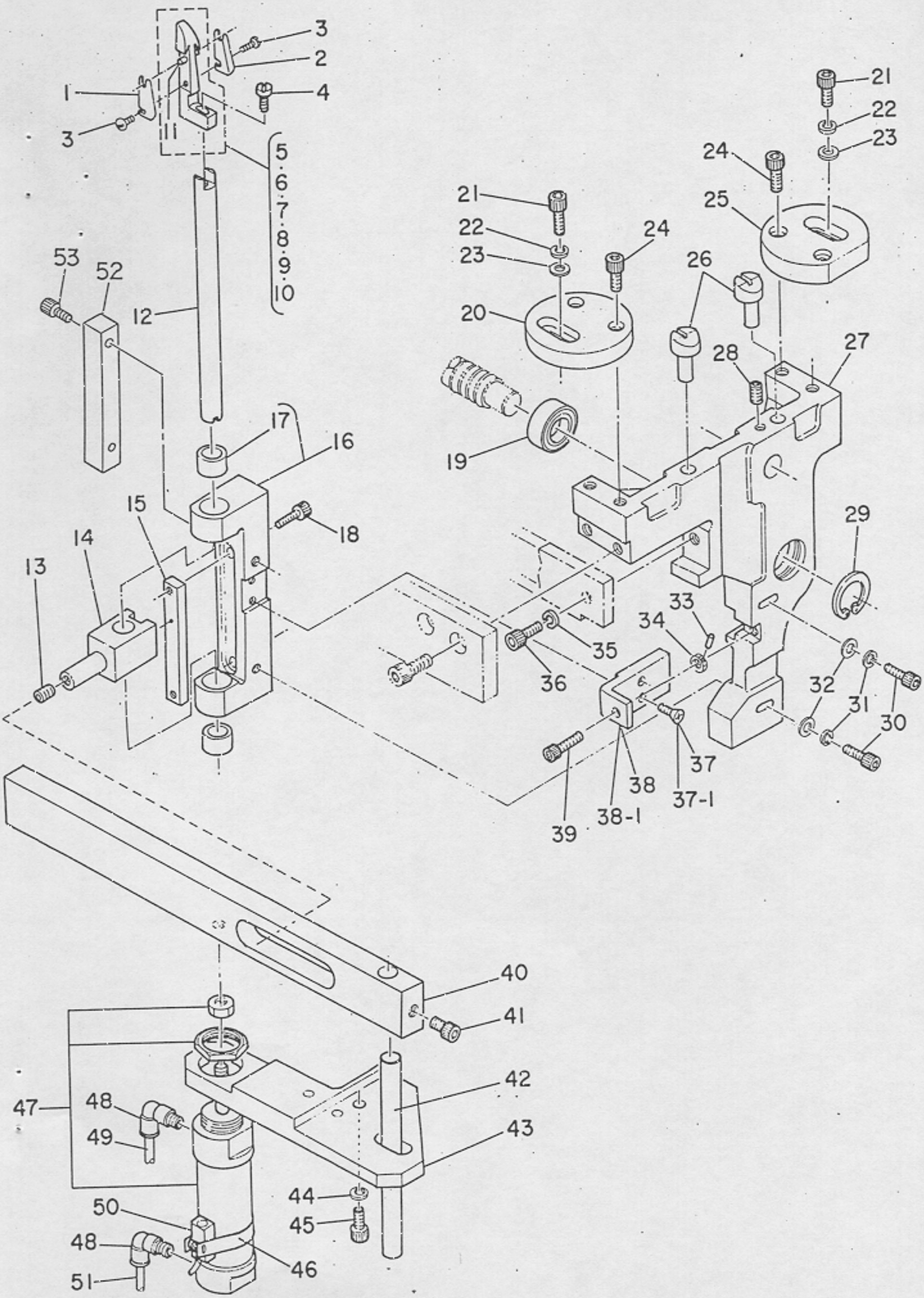

Ref. No.	Note 注記	Part No. 品番	Description	E. C. 変更年月	品名	Amt. Req. 数量
1		G5252-116-A00	CORNER KNIFE 1		コーナーメス 1	1
2		G5253-116-A00	CORNER KNIFE 2		コーナーメス 2	1
3		SS-5060410-SP	SCREW 3/32-56 L=3.5		トウスネジ* 3/32-56 L=3.5	2
4		SS-6111610-SP	SCREW 11/64-40 L=16		ヒラネジ* 11/64-40 L=16	1
5	◇01	G5246-116-AA0	KNIFE HOLDER ASM. 10MM		メスホルダ*- 10ミリ クミ	1
6	◇02	G5246-116-BA0	KNIFE HOLDER ASM. 12MM		メスホルダ*- 12ミリ クミ	1
7	◇03	G5225-119-AA0	KNIFE HOLDER ASM. 14MM		メスホルダ* クミ 14	1
8	◇04	G5225-119-BA0	KNIFE HOLDER ASM. 16MM		メスホルダ* クミ 16	1
9	◇05	G5225-119-CA0	KNIFE HOLDER ASM. 18MM		メスホルダ* クミ 18	1
10	◇06	G5225-119-DA0	KNIFE HOLDER ASM. 20MM		メスホルダ* クミ 20	1
11		G5830-116-000	SPRING PIN		メスホルダ*-ピ*ン	(1)
12		G5243-116-000	LIFTING ROD		ショーコーロット*	1
13		SM-8082002-TP	SCREW M8 L=20		トメネジ* M8 L=20	1
14		G5244-116-000	ROD BOSS		ロット*ボ*ス	1
15		G5242-116-000-A	SLIDE PLATE		シュート*-イタ	1
16		G5240-116-0A0-A	CORNER KNIFE SHAFT BASE ASM.		コテイサンカクメス シ*クタ*イ クミ	1
17		G5247-116-000	BUSHING		メスホルダ*-フ*ッシュ	(2)
18		SM-6041502-TP	SCREW M4X0.7 L=15		テ*ンシ*ヘ*ン トメネジ*	2
19		G5807-116-000	RADIAL BALL BEARING		ラシ*アルボ*ール ヘ*アリング* A	1
20		G5207-119-000	FRAME FASTENER A		ワントリツケ* A	1
21		SM-6063002-TP	SCREW M6 L=30		ロッカクアナボ*ルト	2
22		WS-0610002-KN	SPRING WASHER 6.1X12.2X1.5		ハ*ネサ*カ*ネ M6	2
23		WP-0841600-SC	WASHER		ヒラサ*カ*ネ	2
24		SM-6082002-TP	SCREW M8 L=20		ロッカクアナボ*ルト	4
25		G5208-119-000	FRAME FASTENER B		ワクトリツケサ* B	1
26		G5223-119-000	POSITIONING PIN B		イチキメピ*ン B	2
27		G5202-119-000	BEARING STAND		シ*クウケタ*イ	1
28		SM-8061202-TP	SCREW M6 L=12		トメネジ*	1
29		RC-3700002-KP	RETAINING RING 37		Cカ*タトメワ	1
30		SM-6063502-TP	SCREW M6 L=35		ロッカクアナボ*ルト	2
31		WS-0610002-KN	SPRING WASHER 6.1X12.2X1.5		ハ*ネサ*カ*ネ M6	2
32		WP-0641601-SC	WASHER		ヒラサ*カ*ネ ミカ*キマル M6	2
33		PS-0200102-KH	SPRING PIN 2.0X10		スプ*リンク*ピ*ン 2.0X10	1
34		NM-6060001-SC	NUT M6		ロッカクナット M6 1シュ	1
35		WS-0820002-KN	SPRING WASHER M8		ハ*ネサ*カ*ネ M8	1
36		SM-6082502-TP	SCREW M8 L=25		ロッカクアナボ*ルト	1
37	*	SM-1041201-SC	SCREW M4 L=12	D.07/83	サラコネジ* M4X0.7 L=12	-
37-1	*	SM-6040802-TP	SCREW M4X0.7 L=8	A.07/83	ロッカクアナボ*ルト M4X0.7 L=8	2
38	*	G5245-116-000	ADJUSTING CLAMP	D.07/83	アシ*ヤストカナク*	-
38-1	*	G5245-116-000-A	ADJUSTING CLAMP	A.07/83	アシ*ヤストカナク*	1
39		SM-6063002-TP	SCREW M6 L=30		ロッカクアナボ*ルト	1
40		G5236-116-000	KNIFE LIFTING GUIDE		メスショーコーカ*イト*	1
41		SM-6061002-TP	SCREW M6 L=10		ロッカクアナボ*ルト M6 L=10	1
42		G5217-119-000	AUXILIARY SHAFT		サフ*シ*ク	1
43		G5235-116-000	CYLINDER INSTALLATION BASE		シリンタ*タ*イ	1
44		WS-0610002-KN	SPRING WASHER 6.1X12.2X1.5		ハ*ネサ*カ*ネ M6	2
45		SM-6062002-TP	SCREW M6 L=20		ロッカクアナボ*ルト M6 L=20	2
46		G5224-119-000	SWITCH HOLDER C		キンセツスイッチ トリツケカナク* C	1
47		PA-3006501-A0	KNIFE LIFTING CYLINDER ASM.		エアシリンタ* ムキユウユ クミ	1
48		PJ-3040651-01	ELBOW UNION 6XPT1/8		エルボ*ユニオン 6XPT1/8	2
49		G5465-116-000	TUBE HOSE, YELLOW		チユーフ*ホース キ	0.9
50		G6507-119-0A0	CONTACTLESS SWITCH ASM. A		キンセツ スイッチ A クミ	1
51		G5464-116-000	TUBE HOSE, GREEN		チユーフ*ホース ミト*リ	0.8
52	◇07	G5262-116-000	KNIFE SHAFT BASE STOPPER	A.01/84	メスシ*クタ*イ ストツパ*-	1
53	◇07	SM-6061002-TP	SCREW M6 L=10	A.01/84	ロッカクアナボ*ルト M6 L=10	2

Note (注記) ◇01 ..... For 9.5, 10 mm — 9.5、10㎜用
◇02 ..... For 12 mm — 12㎜用
◇03 ..... For 14 mm — 14㎜用
◇04 ..... For 16 mm — 16㎜用
◇05 ..... For 18 mm — 18㎜用
◇06 ..... For 20 mm — 20㎜用
◇07 ..... For 14, 16, 18, 20 mm — 14、16、18、20㎜用

10. BINDER COMPONENTS (1)
バインダー関係（1）

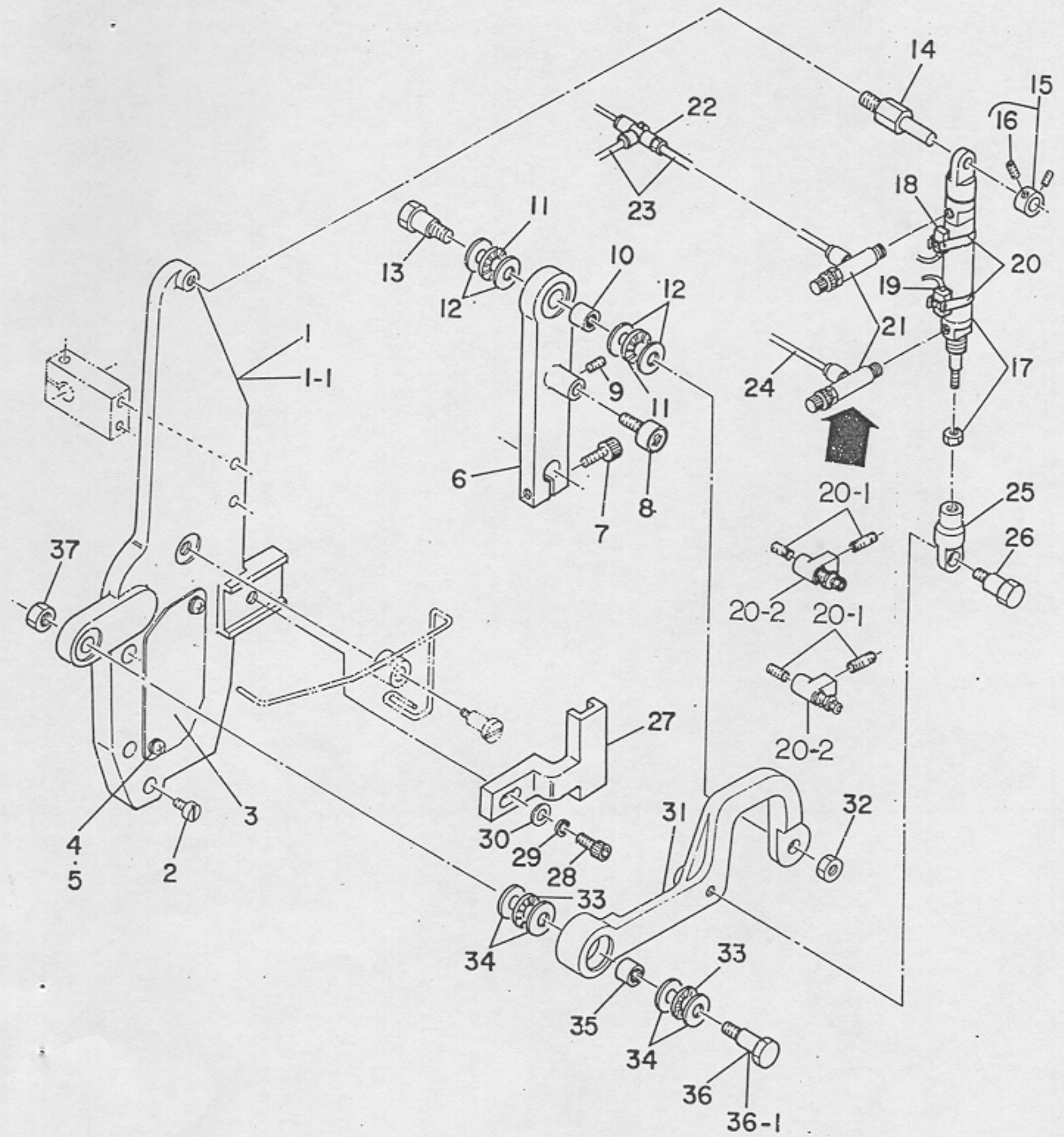

Ref. No.	Note 注記	Part No. 品番	Description	E. C. 変更年月	品名	Amt. Req. 数量
1	*	G5301-119-000	BINDER BRACKET	D.07/83	ﾊﾞｲﾝﾀﾞｰ ﾌﾞﾗｹｯﾄ	-
1-1	*	G5301-119-000-A	BINDER BRACKET	A.07/83	ﾊﾞｲﾝﾀﾞｰ ﾌﾞﾗｹｯﾄ	1
2		SS-6111610-SP	SCREW 11/64-40 L=16		ﾋﾗﾈｼﾞ 11/64-40 L=16	3
3		G5302-119-000	COVER		ｶﾊﾞｰ	1
4		SM-3040601-SC	SCREW M4X0.7 L=6		ﾏﾙｺﾈｼﾞ	2
5		WS-0410002-KN	SPRING WASHER M4		ﾊﾞﾈｻﾞｶﾞﾈ M4	2
6		G5306-119-000	LEVER NO.1		ﾀﾞｲｲﾁﾚﾊﾞｰ	1
7		SM-6062502-TP	SCREW M6 L=25		ﾛｯｶｸｱﾅﾎﾞﾙﾄ M6 L=25	1
8		G5823-116-000	CAM FOLLOWER		ｶﾑﾌｫﾛｱｰ	1
9		SM-8050602-TP	SCREW M5 L=6		ﾄﾒﾈｼﾞ M5X0.8 L=6	1
10		G5323-119-000	SEpARABLE-CAGE NEEDLE BEARING		ﾌﾞﾝﾘｶﾞﾀ ｹﾞｰｼﾞｯﾄ ﾍﾞｱﾘﾝｸﾞ	1
11		G5324-119-000	THRUST NEEDLE BEARING		ｽﾗｽﾄ ﾆｰﾄﾞﾙ ﾍﾞｱﾘﾝｸﾞ	2
12		G5325-119-000	THRUST WASHER		ｽﾗｽﾄﾜｯｼｬ	4
13		G5303-119-000	LEVER PIN		ﾚﾊﾞｰﾋﾟﾝ	1
14		G5305-119-000	CYLINDER PIVOT PIN B		ｼﾘﾝﾀﾞｰ ｼﾃﾝﾋﾟﾝ B	1
15		G5304-119-0A0	COLLAR ASM.		ｾﾂﾄｶﾗｰ A ｸﾐ	1
16		SM-8050602-TP	SCREW M5 L=6		ﾄﾒﾈｼﾞ M5X0.8 L=6	(2)
17		PA-2503001-A0	BINDER LIFTING CYLINDER ASM.		ｴｱｼﾘﾝﾀﾞｰ ﾑｷｽｳｽ ｸﾐ	1
18		G6508-119-0A0	CONTACTLESS SWITCH ASM. C1		ｷﾝｾﾂ ｽｲｯﾁ C1 ｸﾐ	1
19		G6509-119-0A0	CONTACTLESS SWITCH ASM. C2		ｷﾝｾﾂ ｽｲｯﾁ C2 ｸﾐ	1
20		G5326-119-000	SWITCH HOLDER A		ｷﾝｾﾂｽｲｯﾁ ﾄﾘﾂｹﾝｶﾞﾀﾞｰ A	2
20-1	*	G5435-116-000	NIPPLE	D.04/83	ﾆｯﾌﾟﾙ B	-
20-2	*	G5423-116-A00	SPEED CONTROLLER	D.04/83	ｽﾋﾟｰﾄﾞ ｺﾝﾄﾛｰﾗ	-
21	*	PC-0151020-00	SPEED CONTROLLER	A.04/83	ｽﾋﾟｰﾄﾞ ｺﾝﾄﾛｰﾗ	2
22		PJ-3050651-01	TEE UNION		ｻｰﾋﾞｽ ﾁｰｽﾞﾕﾆｵﾝ	1
23		G5464-116-000	TUBE HOSE, GREEN		ﾁｭｰﾌﾞﾎｰｽ ﾐﾄﾞﾘ	2.1
24		G5465-116-000	TUBE HOSE, YELLOW		ﾁｭｰﾌﾞﾎｰｽ ｷ	2.1
25		G5322-119-000	KNUCKLE JOINT		ﾅｯｸﾙｼﾞｮｲﾝﾄ	1
26		G5308-119-000	CYLINDER PIVOT PIN A		ｼﾘﾝﾀﾞｰ ｼﾃﾝﾋﾟﾝ A	1
27		G5315-119-000	SLOPING GUIDE		ﾐｿﾞｶﾑ	1
28		SM-6082502-TP	SCREW M8 L=25		ﾛｯｶｸｱﾅﾎﾞﾙﾄ	1
29		WS-0820002-KN	SPRING WASHER M8		ﾊﾞﾈｻﾞｶﾞﾈ M8	1
30		WP-0841600-SC	WASHER		ﾋﾗｻﾞｶﾞﾈ	1
31		G5307-119-000	LEVER NO.2		ﾀﾞｲﾆﾚﾊﾞｰ	1
32		NM-6100001-SC	NUT M10X1.5		ﾛｯｶｸﾅｯﾄ M10 1ｼｭ	1
33		G5324-119-000	THRUST NEEDLE BEARING		ｽﾗｽﾄ ﾆｰﾄﾞﾙ ﾍﾞｱﾘﾝｸﾞ	2
34		G5325-119-000	THRUST WASHER		ｽﾗｽﾄﾜｯｼｬ	4
35		G5323-119-000	SEPARABLE-CAGE NEEDLE BEARING		ﾌﾞﾝﾘｶﾞﾀ ｹﾞｰｼﾞｯﾄ ﾍﾞｱﾘﾝｸﾞ	1
36	*	G5303-119-000	LEVER PIN	D.07/83	ﾚﾊﾞｰﾋﾟﾝ	-
36-1	*	G5327-119-000	LEVER PIN NO.2	A.07/83	ﾀﾞｲ2 ﾚﾊﾞｰﾋﾟﾝ	1
37		NM-6100001-SC	NUT M10X1.5		ﾛｯｶｸﾅｯﾄ M10 1ｼｭ	1

11. BINDER COMPONENTS (2)
バインダー関係（2）

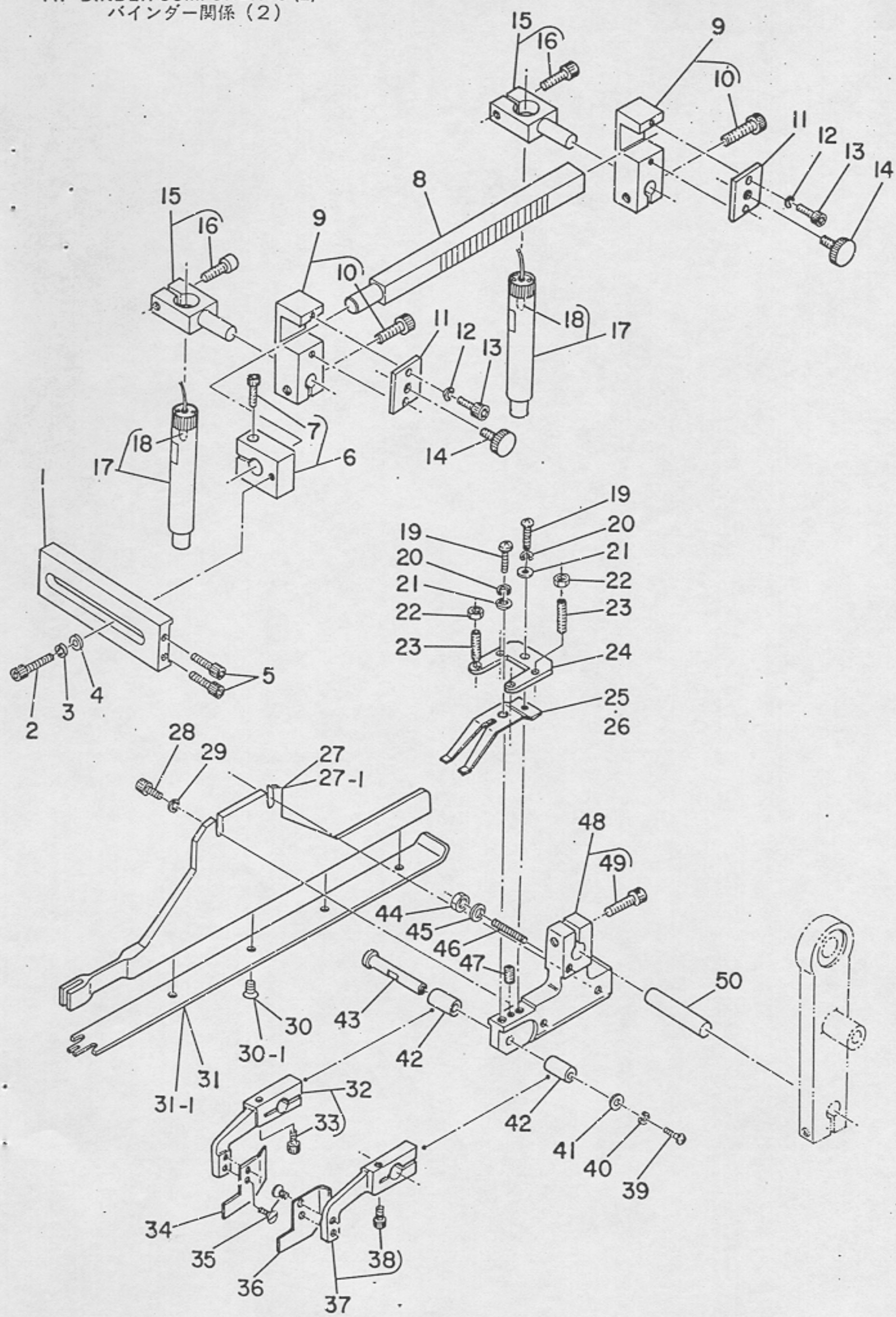

Ref. No.	Note 注記	Part No. 品番	Description	E. C. 変更年月	品名	Amt. Req. 数量
1	*	G5316-119-000-A	LAMP GUIDE SCALE BLOCK	A.06/83	ｼｬｸﾀﾞｲ ｽﾗｲﾄﾞｶﾅﾉﾞ	1
2	*	SM-6062502-TP	SCREW M6 L=25	A.06/83	ﾛｯｶｸｱﾅﾎﾞﾙﾄ M6 L=25	1
3	*	WS-0610002-KN	SPRING WASHER 6.1X12.2X1.5	A.06/83	ﾊﾞﾈｻﾞｶﾞﾈ M6	1
4	*	WP-0641601-SC	WASHER	A.06/83	ﾋﾗｻﾞｶﾞﾈ ﾐｶﾞｷﾏﾙ M6	1
5		SM-6052002-TP	SCREW M5 L=20		ﾛｯｶｸｱﾅﾎﾞﾙﾄ M5X0.8 L=20	2
6	*	G5320-119-0A0	LAMP GUIDE SCALE HOLDER ASM.	A.06/83	ｼｬｸﾀﾞｲﾎﾙﾀﾞｰ ｸﾐ	1
7	*	SM-6062502-TP	SCREW M6 L=25	A.06/83	ﾛｯｶｸｱﾅﾎﾞﾙﾄ M6 L=25	(1)
8		G5317-119-0C0	LAMP GUIDE SCALE		ﾏｰｸﾗｲﾄ ｼｬｸﾀﾞｲ	1
9		G5318-119-0A0	LIGHT PROJECTION BRACKET ASM.		ﾄｰｴｲｷﾄﾘﾂｹﾀﾞｲA ｸﾐ	2
10		SM-6052502-TP	SCREW M5X0.8 L=25		ﾛｯｶｸｱﾅﾎﾞﾙﾄ	(2)
11		G5337-116-000	PROJECTION UNIT BRACKET COVER		ﾄｰｴｲｷ ﾄﾘﾂｹﾀﾞｲ	2
12		WS-0310002-KN	SPRING WASHER 3.1X5.9X0.7		ﾊﾞﾈｻﾞｶﾞﾈ 3.1X5.9X0.7	4
13		SM-6031002-TP	SCREW M3X0.5 L=10		ﾛｯｶｸｱﾅﾎﾞﾙﾄ M3X0.5 L=10	4
14		G5338-116-000	CLAMP BOLT		ｼﾒﾂｹﾎﾞﾙﾄ	2
15		G5319-119-0A0	LIGHT PROJECTION BRACKET ASM.		ﾄｰｴｲｷﾄﾘﾂｹﾀﾞｲB ｸﾐ	2
16		SM-6052502-TP	SCREW M5X0.8 L=25		ﾛｯｶｸｱﾅﾎﾞﾙﾄ	(2)
17	*	G6015-116-0A0	CROSS-MARK LAMP ASM.	D.01/84	G6415-119-0A0	-
	*	G6415-119-0A0	CROSS-MARK LAMP ASM.	A.01/84	ｼﾞｭｰｼﾞ ﾏｰｷﾝｸﾞﾗｲﾄ	2
18		G6019-116-000	LAMP		ﾗﾝﾌﾟ	(2)
19		SM-8030802-TP	SCREW M3X0.5 L=8		ﾄﾒﾈｼﾞ	2
20		WS-0310002-KN	SPRING WASHER 3.1X5.9X0.7		ﾊﾞﾈｻﾞｶﾞﾈ 3.1X5.9X0.7	2
21		WP-0320500-SC	WASHER 3.2X7.0X0.5		ﾋﾗｻﾞｶﾞﾈ ｺｶﾞﾀﾏﾙ M3	2
22		NM-6040001-SC	NUT M4		ﾛｯｶｸﾅﾂﾄ M4X0.7 1ｼｭ	4
23		SM-8041402-TP	SCREW M4X0.7 L=14		ﾄﾒﾈｼﾞ M4X0.7 L=14	4
24		G5321-119-000	WORKPIECE GUIDE STOPPER		ｼﾞﾖｳｹﾝ ｽﾄﾂﾊﾟ	1
25	◇01	G5328-116-000	WORKPIECE GUIDE SPRING A		ｷｼﾞｶﾞｲﾄﾞﾊﾞﾈ	1
26	◇02	G5328-116-A00	WORKPIECE GUIDE SPRING B		ｷｼﾞｶﾞｲﾄﾞﾊﾞﾈ	1
27	*	G5319-116-000	BINDER PLATE	D.09/83	ﾊﾞﾝﾀﾞｰｷﾊﾞﾝ	-
27-1	*	G5332-119-000	BINDER PLATE	A.09/83	ﾊﾞｲﾝﾀﾞｰｷﾊﾞﾝ	1
28		SM-6041002-TP	SCREW M4 L=10		ﾛｯｶｸｱﾅﾎﾞﾙﾄ M4X0.7 L=10	2
29		WS-0410002-KN	SPRING WASHER M4		ﾊﾞﾈｻﾞｶﾞﾈ M4	2
30	*	SS-1061010-SP	SCREW 3/32-56 L=10	D.09/83	ｻﾗﾈｼﾞ 3/32-56 L=10	-
30-1	*	G5333-119-000	SCREW M2 L=5	A.09/83	ﾀﾏｽﾉｷﾊﾞﾝ ﾄﾒﾈｼﾞ	4
31	◇03	G5320-116-A00	WELT PATCH BASE PLATE	D.09/83	ﾘﾖｰﾀﾏｷﾊﾞﾝ LR=4.3:4.3	-
31-1	◇03	G5328-119-A00	WELT PATCH BASE PLATE 10MM	A.09/83	ﾘﾖｳﾀﾏ ｼﾞﾖｳｷﾞ	1
32		G5312-119-0A0	WORKPIECE GUIDE ARM RIGHT ASM.		ｶﾞｲﾄﾞｱｰﾑ ﾐｷﾞ ｸﾐ	1
33		SM-6041002-TP	SCREW M4 L=10		ﾛｯｶｸｱﾅﾎﾞﾙﾄ M4X0.7 L=10	(1)
34		G5314-119-000	WORKPIECE GUIDE, RIGHT		ｷｼﾞｶﾞｲﾄﾞ ﾐｷﾞ 180ﾐﾘ	1
35		SS-1060610-SP	SCREW 3/32-56 L=5.5		ｻﾗﾈｼﾞ 3/32-56 L=5.5	4
36		G5313-119-000	WORKPIECE GUIDE, LEFT		ｷｼﾞｶﾞｲﾄﾞ ﾋﾀﾞﾘ 180ﾐﾘ	1
37		G5311-119-0A0	WORKPIECE GUIDE ARM LEFT ASM.		ｶﾞｲﾄﾞｱｰﾑ ﾋﾀﾞﾘ ｸﾐ	1
38		SM-6041002-TP	SCREW M4 L=10		ﾛｯｶｸｱﾅﾎﾞﾙﾄ M4X0.7 L=10	(1)
39		SM-3030601-SC	SCREW M3X0.5 L=6		ﾏﾙｺﾈｼﾞ	1
40		WS-0310002-KN	SPRING WASHER 3.1X5.9X0.7		ﾊﾞﾈｻﾞｶﾞﾈ 3.1X5.9X0.7	1
41		G5329-116-000	WASHER D=8		ｻﾞｶﾞﾈ	1
42		G5323-116-000	ARM BUSHING		ｱｰﾑﾒﾀﾙ	2
43		G5339-116-000	GUIDE PIN		ｶﾞｲﾄﾞﾋﾟﾝ	1
44		NM-6040001-SC	NUT M4		ﾛｯｶｸﾅﾂﾄ M4X0.7 1ｼｭ	1
45		WP-0430800-SC	WASHER 4.3X8X0.8		ﾋﾗｻﾞｶﾞﾈ ｺｶﾞﾀﾏﾙ M4	1
46		SM-8044002-TP	SCREW M4X0.7 L=40		ﾄﾒﾈｼﾞ	1
47		SM-8030802-TP	SCREW M3X0.5 L=8		ﾄﾒﾈｼﾞ	1
48		G5310-119-0A0	BINDER INSTALLATION BASE ASM.		ﾊﾞｲﾝﾀﾞｰﾄﾘﾂｹｸﾞｲ ｸﾐ	1
49		SM-6062502-TP	SCREW M6 L=25		ﾛｯｶｸｱﾅﾎﾞﾙﾄ M6 L=25	(1)
50		G5309-119-000	SUPPORT SHAFT		ｼｼﾞｼﾞｸ	1

Note (注記) ◇01 ..... For 9.5, 10, 12, 14 mm — 9.5、10、12、14mm用
◇02 ..... For 16, 18, 20 mm — 16、18、20mm用
◇03 ..... Selective part — 選択部品
(Refer to the table on page 50.) — (50ページの表をご参照下さい。)

12. SP-3 : STACKER UNIT
スタッカー装置

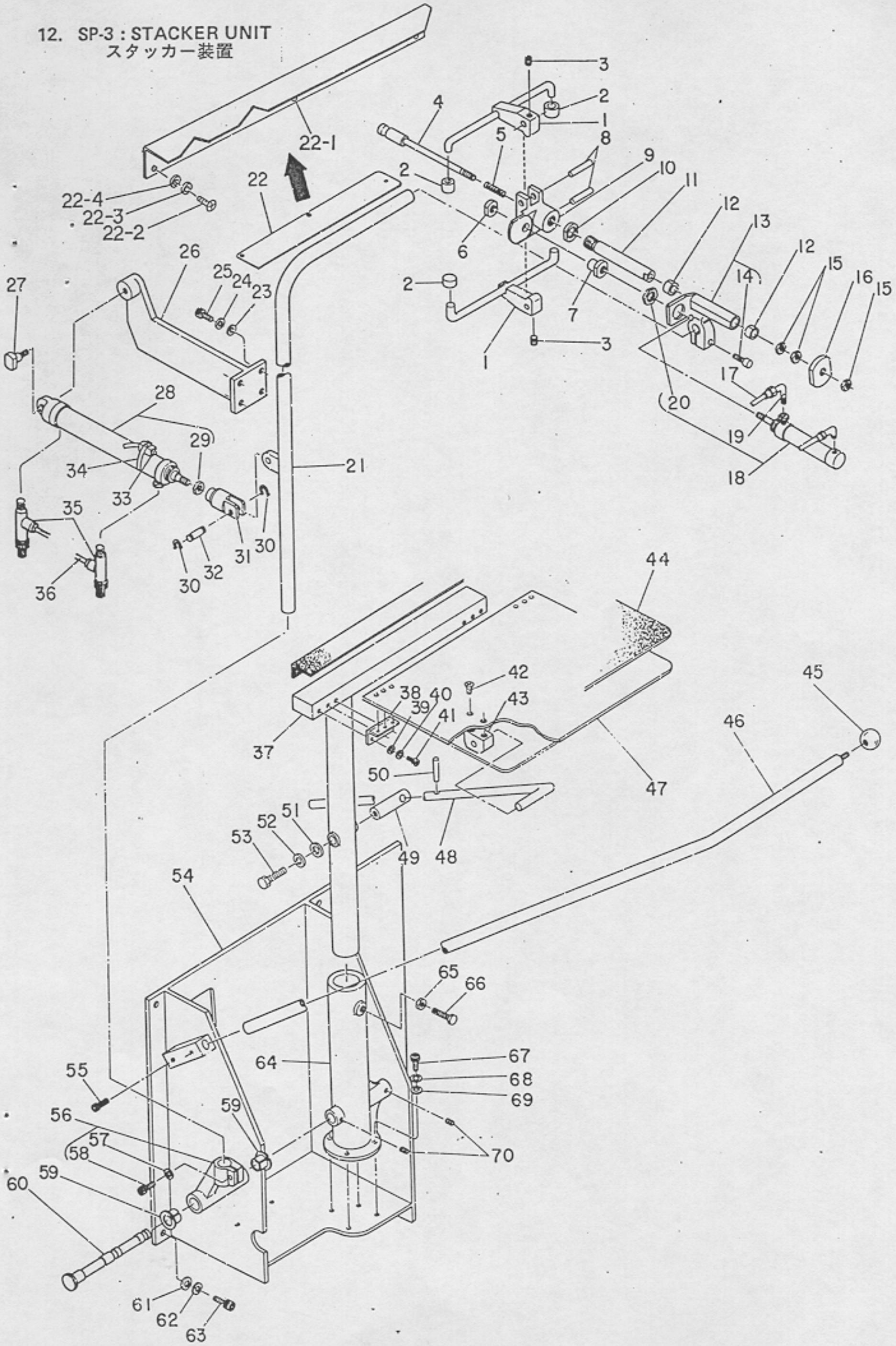

Ref. No.	Note 注記	Part No. 品番	Description	E. C. 変更年月	品名	Amt. Req. 数量
1		G5527-116-000	GASPING CLAMP		ツカミクランプ	2
2		G5528-116-000	RUBBER BOSS		ゴムボス	4
3		SM-8030302-TP	SCREW M3X0.5 L=3		トメネジ M3X0.5 L=3	2
4		G5520-116-000	CENTER SHAFT		センターシャフト	1
5		G5523-116-000	COIL SPRING		コイルバネ	1
6		G5525-116-000	CYLINDER EDGE NUT		シリンダエツジ ナット	1
7		G5524-116-000	CYLINDER EDGE		シリンダエツジ	1
8		G5827-116-000	NEEDLE ROLLER		チャックボス ピン	2
9		G5526-116-000	CHUCK BOSS		チャックボス	1
10		G5522-116-000	CHUCK ROD NUT		チャックロット ナット	1
11		G5519-116-000	CHUCK ROD		チャックロット	1
12		G5819-116-000	DRY BEARING		ドライベアリング E	2
13		G5518-116-0A0	CHUCK STAND ASM.		チャックタイ クミ	1
14		SM-6083002-SP	SCREW M8 L=30		ロッカクアナボルト M8 L=30	(1)
15		NM-6080001-SC	NUT M8X1.25		ロッカクナット M8 1シュ	3
16		G5521-116-000	CHUCK JAW		チャック アタリサ	1
17		G5462-116-000	TUBE HOSE, BLACK		チューブホース クロ	1.6
18		G5405-116-0A0	STACKER CLAMPING CYLINDER ASM.		スタッカクランプ シリンダー クミ	1
19		G5445-116-000	ELBOW UNION		エルボユニオン C	(2)
20		G5468-116-000	NUT		トリツケナット	(1)
21		G5505-116-000	ROCKING ARM		クビフリアーム	1
22	*	G5004-116-000	SUB-PLATE	D.01/84	サブプレート	-
22-1	*	G5004-116-000-A	SUB-PLATE	A.01/84	サブプレート	1
22-2	*	SM-3051001-SA	SCREW M5X0.8 L=10	A.01/84	マルコネジ M5X0.8 L=10	3
22-3	*	WS-0510002-KN	SPRING WASHER 5.1X8.5X1.3	A.01/84	バネサカネ 5.1X9.2X1.3	3
22-4	*	WP-0531000-SC	WASHER M5	A.01/84	ヒラサカネ コカタマル M5	3
23		WP-0641601-SC	WASHER		ヒラサカネ ミカキマル M6	4
24		WS-0610002-KN	SPRING WASHER 6.1X12.2X1.5		バネサカネ M6	4
25		SM-6061402-TP	SCREW M6 L=14		ロッカクアナネジ M6 L=14	4
26		G5508-116-000	CYLINDER PIVOT BRACKET		シリンダ シテン ブラケット	1
27		G5509-116-000	CYLINDER PIVOT PIN		シリンダシテン ピン	1
28		PA-2515001-A0	STACKER ROCKING CYLINDER ASM.		エアシリンダ ムキユラユ クミ	1
29		NM-6100618-SB	NUT M10X1.25		ロッカクナット M10X1.25	(1)
30		G5824-116-000	STOP RING		ストップリング	2
31		G5409-116-000	Y-SHAPE KNUCKLE JOINT		ナックルジョイント	1
32		G5408-116-000	KNUCKLE JOINT PIN		ピン	1
33		G6601-119-0A0	CONTACTLESS SWITCH ASM. D		キンセツスイッチ D クミ	1
34		G5326-119-000	SWITCH HOLDER A		キンセツスイッチ トリツケカナグ A	1
35		PC-0151030-00	SPEED CONTROLLER		スピートコントローラ	2
36		G5465-116-000	TUBE HOSE, YELLOW		チューブホース キ	2.5
37		G5503-116-000	T-SHAPED FRAME		Tカタフレーム	1
38		G5843-116-000	RISED HINGE		ヤマカタチヨーバン	2
39		WP-0430800-SC	WASHER 4.3X8X0.8		ヒラサカネ コカタマル M4	12
40		WS-0410002-KN	SPRING WASHER M4		バネサカネ M4	12
41		SM-6040602-TP	SCREW M4 L=6		ロッカクアナボルト M4X0.7 L=6	12
42		SM-1061001-SC	SCREW M6 L=10		サラネジ	2
43		G5517-116-000	BLOCK BRACKET		ブロックブラケット	1
44		G5850-116-000	VELVET CLOTH		ビロード	1
45		G5837-116-000	GRIP		フリタマ	1
46		G5510-116-000	STACKER SAFETY PIPE		スタッカ アンセンパイプ	1
47		G5504-116-000	TAKE-UP TABLE		キチウケ テーブル	1
48		G5512-116-000	TABLE SUPPORT BAR		テーブルササエボー	1
49		G5513-116-000	FIXING PIN		コテイピン	1
50		G5832-116-000	SPRING PIN		テーブルササエボー ピン	1
51		G5514-116-000	WASHER D=30		サカネ	1
52		WS-0820002-KN	SPRING WASHER M8		バネサカネ M8	1
53		SM-6083002-TP	SCREW M8 L=30		ロッカクアナボルト	1
54		G5501-116-A00	MAIN FRAME		メインフレーム	1
55		SM-6061402-TP	SCREW M6 L=14		ロッカクアナネジ M6 L=14	2
56		G5506-116-0A0	ARM BRACKET ASM.		アームブラケット クミ	1
57		WS-0820002-KN	SPRING WASHER M8		バネサカネ M8	(1)
58		SM-6083502-TP	SCREW M8 L=35		ロッカクアナボルト	(1)
59		G5820-116-000	DRY BEARING		ツバツキトライ ベアリング	2
60		G5507-116-000	STACKER PIVOT PIN		スタッカ シテンピン	1
61		WP-0641601-SC	WASHER		ヒラサカネ ミカキマル M6	4
62		WS-0610002-KN	SPRING WASHER 6.1X12.2X1.5		バネサカネ M6	4
63		SM-6061402-TP	SCREW M6 L=14		ロッカクアナネジ M6 L=14	4
64		G5502-116-000	FRAME BRACKET		フレームブラケット	1
65		NM-6080001-SC	NUT M8X1.25		ロッカクナット M8 1シュ	1
66		SM-9082503-SC	SCREW M8 L=25		ロッカクボルト	1
67		SM-6061602-TP	SCREW M6 L=16		ロッカクアナボルト	4
68		WS-0610002-KN	SPRING WASHER 6.1X12.2X1.5		バネサカネ M6	4
69		WP-0641601-SC	WASHER		ヒラサカネ ミカキマル M6	4
70		SM-8050602-TP	SCREW M5 L=6		トメネジ M5X0.8 L=6	2

13. SP-11 : SLACKS STACKER UNIT
スラックス用スタッカー装置

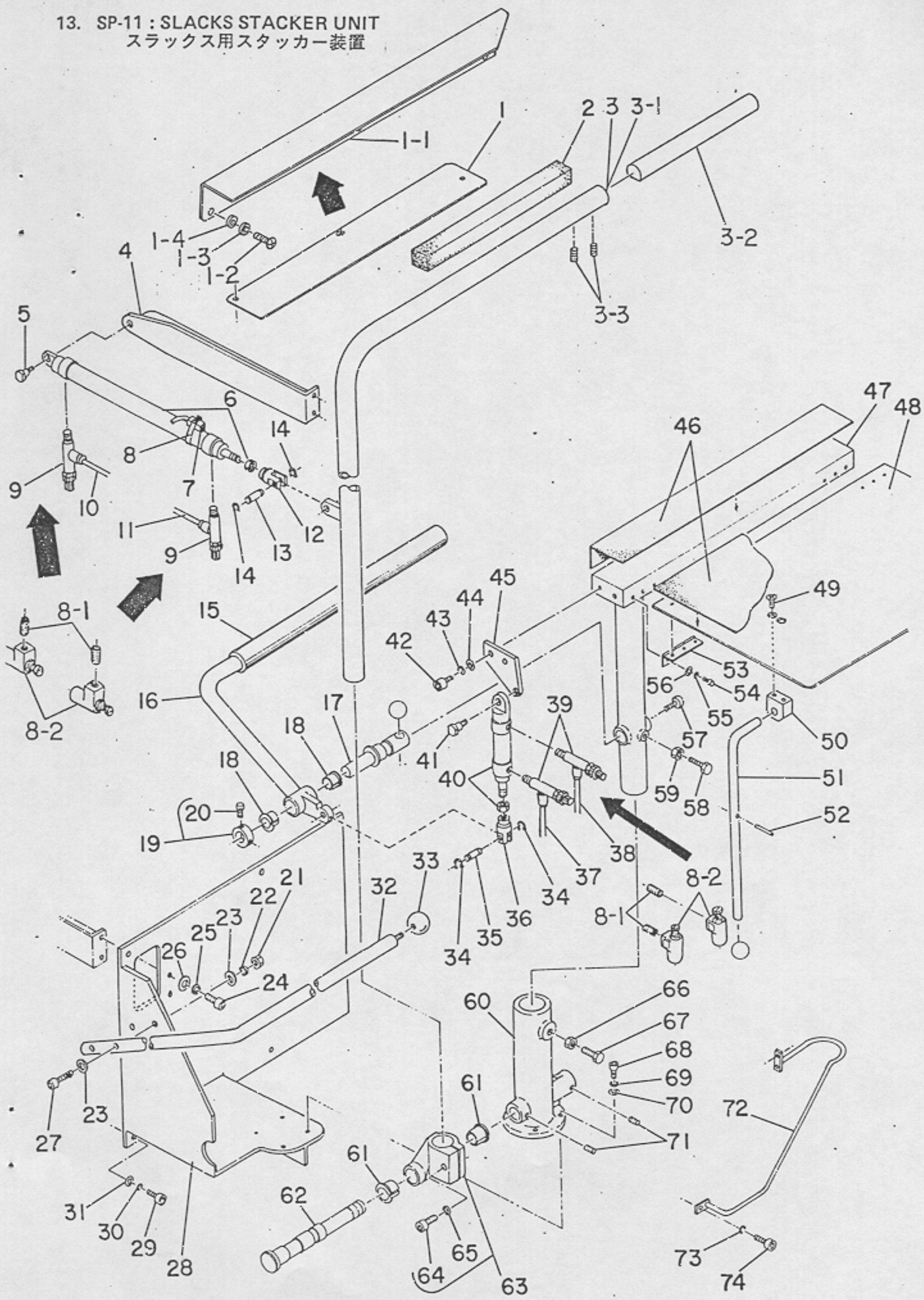

Ref. No.	Note 注記	Part No. 品番	Description	E. C. 変更年月	品名	Amt. Req. 数量
1	*	GSP-02001000	SUB PLATE	D.01/84	ｻﾌﾞﾌﾟﾚｰﾄ B	-
1-1	*	GSP-02001000-A	SUB PLATE	A.01/84	ｻﾌﾞﾌﾟﾚｰﾄ B	1
1-2	*	SM-3051001-SA	SCREW M5X0.8 L=10	A.01/84	ﾏﾙｺﾈｼﾞ M5X0.8 L=10	3
1-3	*	WS-0510002-KN	SPRING WASHER 5.1X8.5X1.3	A.01/84	ﾊﾞﾈｻﾞｶﾞﾈ 5.1X9.2X1.3	3
1-4	*	WP-0531000-SC	WASHER M5	A.01/84	ﾋﾗｻﾞｶﾞﾈ ｺｶﾞﾀﾏﾙ M5	3
2		GSP-11010000	RUBBER CUSHION		ｸｯｼｮﾝｺﾞﾑ	1
3	*	GSP-11004000	ROCKING ARM B	D.09/83	ｸﾋﾞﾌﾘｱｰﾑ B	-
3-1	*	GSP-11004000-A	ROCKING ARM B	A.09/83	ｸﾋﾞﾌﾘｱｰﾑ B	1
3-2	*	GSP-11011000	AUXILIARY ROCKING ARM	A.09/83	ｸﾋﾞﾌﾘ ﾎｼﾞｮｱｰﾑ	1
3-3	*	SM-8040602-TP	SCREW M4X0.7 L=6	A.09/83	ﾄﾒﾈｼﾞ	2
4		GSP-11006000	CYLINDER PIVOT BRACKET B		ｼﾘﾝﾀﾞｰｼﾃﾝ ﾌﾞﾗｹｯﾄ B	1
5		G5509-116-000	CYLINDER PIVOT PIN		ｼﾘﾝﾀﾞｰｼﾃﾝ ﾋﾟﾝ	1
6		PA-2525001-A0	STACKER ROCKING CYLINDER ASM.		ｴｱｼﾘﾝﾀﾞｰ ﾑｷｺｳｺﾞ ｸﾐ	1
7		G6601-119-0A0	CONTACTLESS SWITCH ASM. D		ｷﾝｾﾂｽｲｯﾁ D ｸﾐ	1
8		G5326-119-000	SWITCH HOLDER A		ｷﾝｾﾂｽｲｯﾁ ﾄﾘｯｹｶﾅｸﾞ A	1
8-1	*	G5435-116-000	NIPPLE	D.04/83	ﾆｯﾌﾟﾙ B	-
8-2	*	G5422-116-000	SPEED CONTROLLER	D.04/83	ｽﾋﾟｰﾄﾞｺﾝﾄﾛｰﾗｰ A	-
9	*	PC-0151030-00	SPEED CONTROLLER	A.04/83	ｽﾋﾟｰﾄﾞｺﾝﾄﾛｰﾗ	2
10		G5460-116-000	TUBE HOSE, RED		ﾁｭｰﾌﾞﾎｰｽ ｱｶ	0.3
11		G5465-116-000	TUBE HOSE, YELLOW		ﾁｭｰﾌﾞﾎｰｽ ｷ	0.3
12		GSP-02010000	Y-SHAPE KNUCKLE JOINT B		ﾅｯｸﾙｼﾞｮｲﾝﾄ B	1
13		GSP-02011000	KNUCKLE JOINT PIN B		ﾅｯｸﾙﾋﾟﾝ B	1
14		G5824-116-000	STOP RING		ｽﾄｯﾌﾟﾘﾝｸﾞ	2
15	*	GSP-11009000	VINYL TUBE	D.01/84	ﾋﾞﾆｰﾙﾁｭｰﾌﾞ	-
16		GSP-11007000	PRESSER ARM B		ｵｻｴｱｰﾑ B	1
17		GSP-02014000	FIXING SHAFT B		ｺﾃｲｼﾞｸ B	1
18		GSP-02018000	DRY BEARING		ﾂﾊﾞﾂｷﾄﾞﾗｲﾍﾞｱﾘﾝｸﾞ	2
19		GSP-020150A0	THRUST COLLAR ASM. B		ｺﾃｲｼﾞｸｽﾗｽﾄ B ｸﾐ	1
20		SM-6040802-TP	SCREW M4X0.7 L=8		ﾛｯｶｸｱﾅﾎﾞﾙﾄ M4X0.7 L=8	(2)
21		NM-6060001-SC	NUT M6		ﾛｯｶｸﾅｯﾄ M6 1ｼｭ	2
22		WS-0610002-KN	SPRING WASHER 6.1X12.2X1.5		ﾊﾞﾈｻﾞｶﾞﾈ M6	2
23		WP-0641601-SC	WASHER		ﾋﾗｻﾞｶﾞﾈ ﾐｶﾞｷﾏﾙ M6	4
24		SM-6061402-TP	SCREW M6 L=14		ﾛｯｶｸｱﾅﾈｼﾞ M6 L=14	2
25		WS-0610002-KN	SPRING WASHER 6.1X12.2X1.5		ﾊﾞﾈｻﾞｶﾞﾈ M6	2
26		WP-0641601-SC	WASHER		ﾋﾗｻﾞｶﾞﾈ ﾐｶﾞｷﾏﾙ M6	2
27		SM-6063502-TP	SCREW M6 L=35		ﾛｯｶｸｱﾅﾎﾞﾙﾄ	2
28		GSP-11001000	MAIN FRAME B		ﾒｲﾝﾌﾚｰﾑ B	1
29		SM-6061402-TP	SCREW M6 L=14		ﾛｯｶｸｱﾅﾈｼﾞ M6 L=14	4
30		WS-0610002-KN	SPRING WASHER 6.1X12.2X1.5		ﾊﾞﾈｻﾞｶﾞﾈ M6	4
31		WP-0641601-SC	WASHER		ﾋﾗｻﾞｶﾞﾈ ﾐｶﾞｷﾏﾙ M6	4
32		GSP-02013000	STACKER SAFETY PIPE B		ｽﾀｯｶｰｱﾝｾﾞﾝﾊﾟｲﾌﾟ	1
33		G5837-116-000	GRIP		ﾌﾘﾀﾏ	1
34		G5824-116-000	STOP RING		ｽﾄｯﾌﾟﾘﾝｸﾞ	2
35		GSP-02011000	KNUCKLE JOINT PIN B		ﾅｯｸﾙﾋﾟﾝ B	1
36		G5409-116-000	Y-SHAPE KNUCKLE JOINT		ﾅｯｸﾙｼﾞｮｲﾝﾄ	1
37		G5465-116-000	TUBE HOSE, YELLOW		ﾁｭｰﾌﾞﾎｰｽ ｷ	0.8
38		G5464-116-000	TUBE HOSE, GREEN		ﾁｭｰﾌﾞﾎｰｽ ﾐﾄﾞﾘ	0.8
39	*	PC-0151030-00	SPEED CONTROLLER	A.04/83	ｽﾋﾟｰﾄﾞｺﾝﾄﾛｰﾗ	2
40		PA-2004001-A0	PRESSER ARM CYLINDER ASM.		ｴｱｼﾘﾝﾀﾞｰ ﾑｷｺｳｺﾞ ｸﾐ	1
41		G5509-116-000	CYLINDER PIVOT PIN		ｼﾘﾝﾀﾞｰｼﾃﾝ ﾋﾟﾝ	1
42		SM-6051402-TP	SCREW M5X0.8 L=14		ﾛｯｶｸｱﾅﾎﾞﾙﾄ	2
43		WS-0510002-KN	SPRING WASHER 5.1X8.5X1.3		ﾊﾞﾈｻﾞｶﾞﾈ 5.1X9.2X1.3	2
44		WP-0531000-SC	WASHER M5		ﾋﾗｻﾞｶﾞﾈ ｺｶﾞﾀﾏﾙ M5	2
45		GSP-11008000	CYLINDER BASE PLATE B		ｵｻｴｼﾘﾝﾀﾞﾀﾞｲ	1
46		G5850-116-000	VELVET CLOTH		ﾋﾞﾛｰﾄﾞ	1
47		GSP-11003000	T-SHAPED FRAME		ﾃｲｶﾞﾀﾌﾚｰﾑ	1
48		GSP-02004000	TAKE-UP TABLE B		ｷｼﾞｸｹﾃｰﾌﾞﾙ B	1
49		SM-1061001-SC	SCREW M6 L=10		ｻﾗﾈｼﾞ	2
50		G5517-116-000	BLOCK BRACKET		ﾌﾞﾛｯｸﾌﾞﾗｹｯﾄ	1
51		G5512-116-000	TABLE SUPPORT BAR		ﾃｰﾌﾞﾙｻﾎｰﾄｴﾎﾞｰ	1
52		G5832-116-000	SPRING PIN		ﾃｰﾌﾞﾙｻﾎｰﾄｴﾎﾞｰ ﾋﾟﾝ	1
53		G5843-116-000	RISED HINGE		ﾔﾏｶﾞﾀﾁｮｰﾊﾞﾝ	2
54		SM-6040602-TP	SCREW M4 L=6		ﾛｯｶｸｱﾅﾎﾞﾙﾄ M4X0.7 L=6	12
55		WS-0410002-KN	SPRING WASHER M4		ﾊﾞﾈｻﾞｶﾞﾈ M4	12
56		WP-0430800-SC	WASHER 4.3X8X0.8		ﾋﾗｻﾞｶﾞﾈ ｺｶﾞﾀﾏﾙ M4	12
57		SM-6061402-TP	SCREW M6 L=14		ﾛｯｶｸｱﾅﾈｼﾞ M6 L=14	1
58		SM-9082503-SC	SCREW M8 L=25		ﾛｯｶｸﾎﾞﾙﾄ	1
59		NM-6080001-SC	NUT M8X1.25		ﾛｯｶｸﾅｯﾄ M8 1ｼｭ	1
60		G5502-116-000	FRAME BRACKET		ﾌﾚｰﾑﾌﾞﾗｹｯﾄ	1
61		G5820-116-000	DRY BEARING		ﾂﾊﾞﾂｷﾄﾞﾗｲ ﾍﾞｱﾘﾝｸﾞ	2
62		GSP-02007000	STACKER PIVOT PIN B		ｼﾃﾝﾋﾟﾝ B	1
63		GSP-110050A0	ARM BRACKET B ASM.		ｱｰﾑﾌﾞﾗｹｯﾄ B ｸﾐ	1
64		SM-6083002-TP	SCREW M8 L=30		ﾛｯｶｸｱﾅﾎﾞﾙﾄ	(1)
65		WS-0820002-KN	SPRING WASHER M8		ﾊﾞﾈｻﾞｶﾞﾈ M8	(1)
66		NM-6080001-SC	NUT M8X1.25		ﾛｯｶｸﾅｯﾄ M8 1ｼｭ	1
67		SM-9082503-SC	SCREW M8 L=25		ﾛｯｶｸﾎﾞﾙﾄ	1
68		SM-6061602-TP	SCREW M6 L=16		ﾛｯｶｸｱﾅﾎﾞﾙﾄ	4
69		WS-0610002-KN	SPRING WASHER 6.1X12.2X1.5		ﾊﾞﾈｻﾞｶﾞﾈ M6	4
70		WP-0641601-SC	WASHER		ﾋﾗｻﾞｶﾞﾈ ﾐｶﾞｷﾏﾙ M6	4
71		SM-8050602-TP	SCREW M5 L=6		ﾄﾒﾈｼﾞ M5X0.8 L=6	2
72		GSP-11002000	GARMENT GUIDE		ﾐｺﾞﾛｶﾞｲﾄﾞ	1
73		WS-0510002-KN	SPRING WASHER 5.1X8.5X1.3		ﾊﾞﾈｻﾞｶﾞﾈ 5.1X9.2X1.3	3
74		SM-6051002-TP	SCREW M5 L=10		ﾛｯｶｸｱﾅﾎﾞﾙﾄ M5X0.8 L=10	3

14. PNEUMATIC COMPONENTS
空圧関係

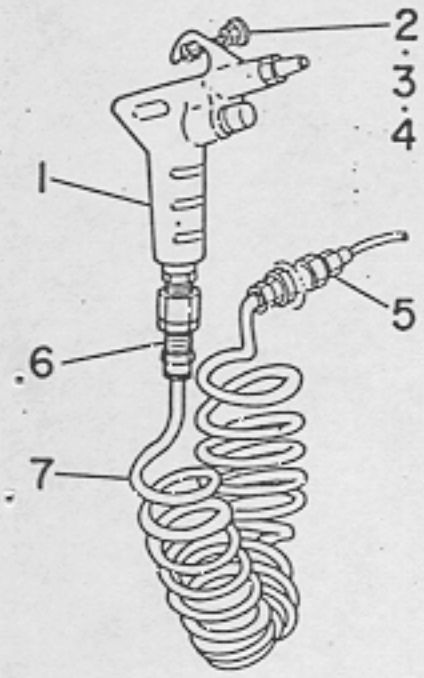

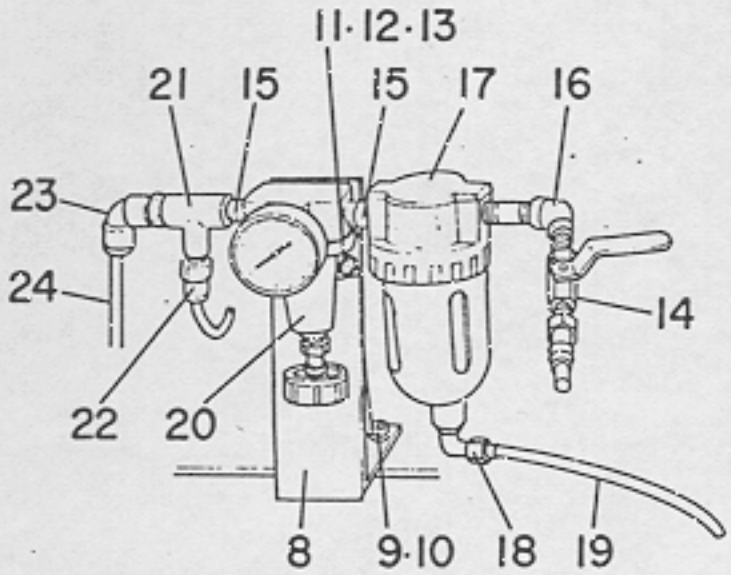

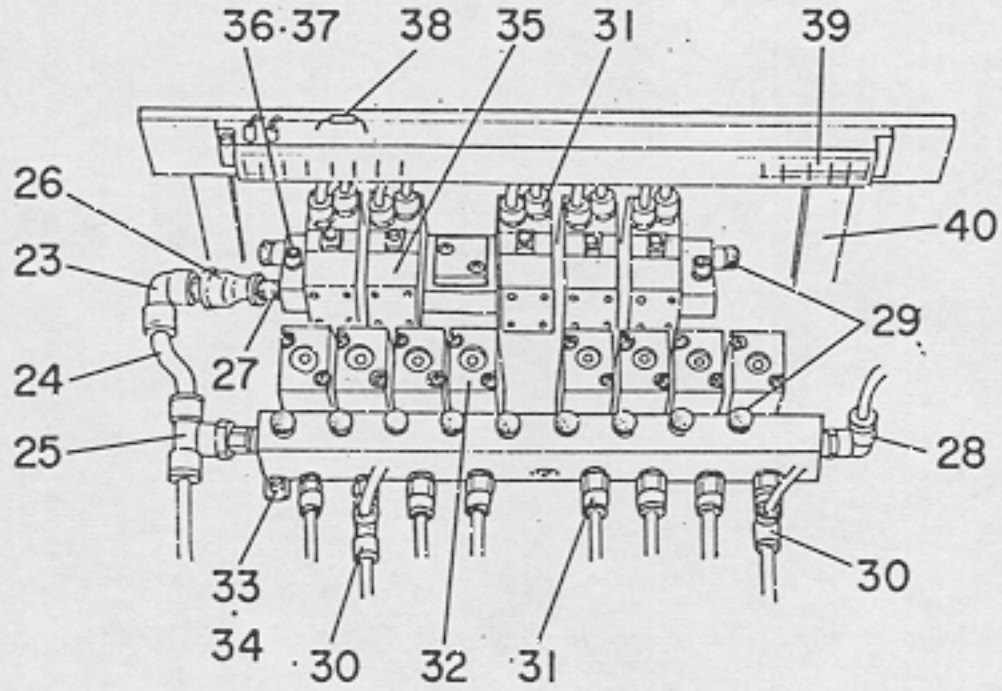

Ref. No.	Note 注記	Part No. 品番	Description	E. C. 変更年月	品名	Amt. Req. 数量
1		G5432-116-000	AIR GUN		エアガン	1
2		SM-6053002-TP	SCREW M5X0.8 L=30		ロッカクアナボルト	1
3		NM-6050001-SC	NUT M5		ロッカクナット M5X0.8 1シュ	1
4		WP-0531000-SC	WASHER M5		ヒラサガネ コガタマル M5	1
5		G5493-116-A00	COUPLING		ハネルタッチ テカホンツギテ	1
6		PJ-3020652-01	SOCKET		メスユニオン	1
7		G5458-116-000	CURLED TUBE		カールチューブ	1
8		G5012-119-B00	BRACKET		エアユニット ブラケット	1
9		SM-3051401-SC	SCREW M5X0.8 L=14		マルネジ	3
10		WS-0510002-KN	SPRING WASHER 5.1X8.5X1.3		ハネサカネ 5.1X9.2X1.3	3
11		SM-6061002-TP	SCREW M6 L=10		ロッカクアナボルト M6 L=10	2
12		WS-0610002-KN	SPRING WASHER 6.1X12.2X1.5		ハネサカネ M6	2
13		WP-0641601-SC	WASHER		ヒラサカネ ミカキマル M6	2
14		G5430-116-000	AIR COCK		エアコック	1
15		G5434-116-000	NIPPLE		ニップル 1/4"	3
16		G5492-116-A00	ELBOW		エルボ	1
17		G5427-116-A00	FILTER		フィルター	1
18		PJ-3040652-01	ELBOW UNION 6XPT1/4		エルボユニオン	1
19		G5462-116-000	TUBE HOSE, BLACK		チューブホース クロ	8.5
20		G5499-116-A00	REGULATOR		レギュレータ	1
21		G5491-116-A00	TEE		テイ	1
22		PJ-3010652-01	HALF UNION 6XPT1/4		ハーフユニオン	1
23		PJ-3040852-01	ELBOW UNION 8XPT1/4		エルボユニオン	2
24		BT-0800501-EA	TUBE HOSE, BLUE		ポリウレタン チューブ アオ	0.5
25		PJ-3050852-01	DOUBLE-ENDED TEE UNION		チーズ ユニオン	1
26		G5494-116-A00	REDUCING SOCKET 1/4"		イケイソケット 1/4	1
27		G5441-116-000	HALF UNION		ハーフユニオン B	1
28		PJ-3040652-01	ELBOW UNION 6XPT1/4		エルボユニオン	1
29		G5496-116-A00	SILENCER		サイレンサー	11
30		PJ-3050651-01	TEE UNION		サービス チーズユニオン	2
31		PJ-3010651-03	HALF UNION 6XPT1/8		ハーフユニオン	13
32		G5034-116-0A0	3-WAY SOLENOID VALVE ASM.		3ポート テンシベン クミ	8
33		SH-6041202-TP	SCREW M4X0.7 L=12		ロッカクアナボルト	4
34		WS-0410002-KN	SPRING WASHER M4		ハネサカネ M4	4
35		G5425-116-0A0	4-WAY SOLENOID VALVE ASM.		4ポートテンシベン	5
36		SM-6052502-TP	SCREW M5X0.8 L=25		ロッカクアナボルト	2
37		WS-0510002-KN	SPRING WASHER 5.1X8.5X1.3		ハネサカネ 5.1X9.2X1.3	2
38	*	G6510-119-0A0	DIODE ASM.	M.01/84	ダイオウト クミ	9
39	*	HK-0183503-00	TERMINAL BLOCK	D.01/84	HK-0225503-00	-
	*	HK-0225503-00	TERMINAL BLOCK	A.01/84	タンシタイ	2
40		G5012-119-A00	SOLENOID VALVE INSTALLING BASE		テンシベンベース	1

ELECTRICITY COMPILATION

電気編

1. CONNECTOR CABLE COMPONENTS
コネクタケーブル関係

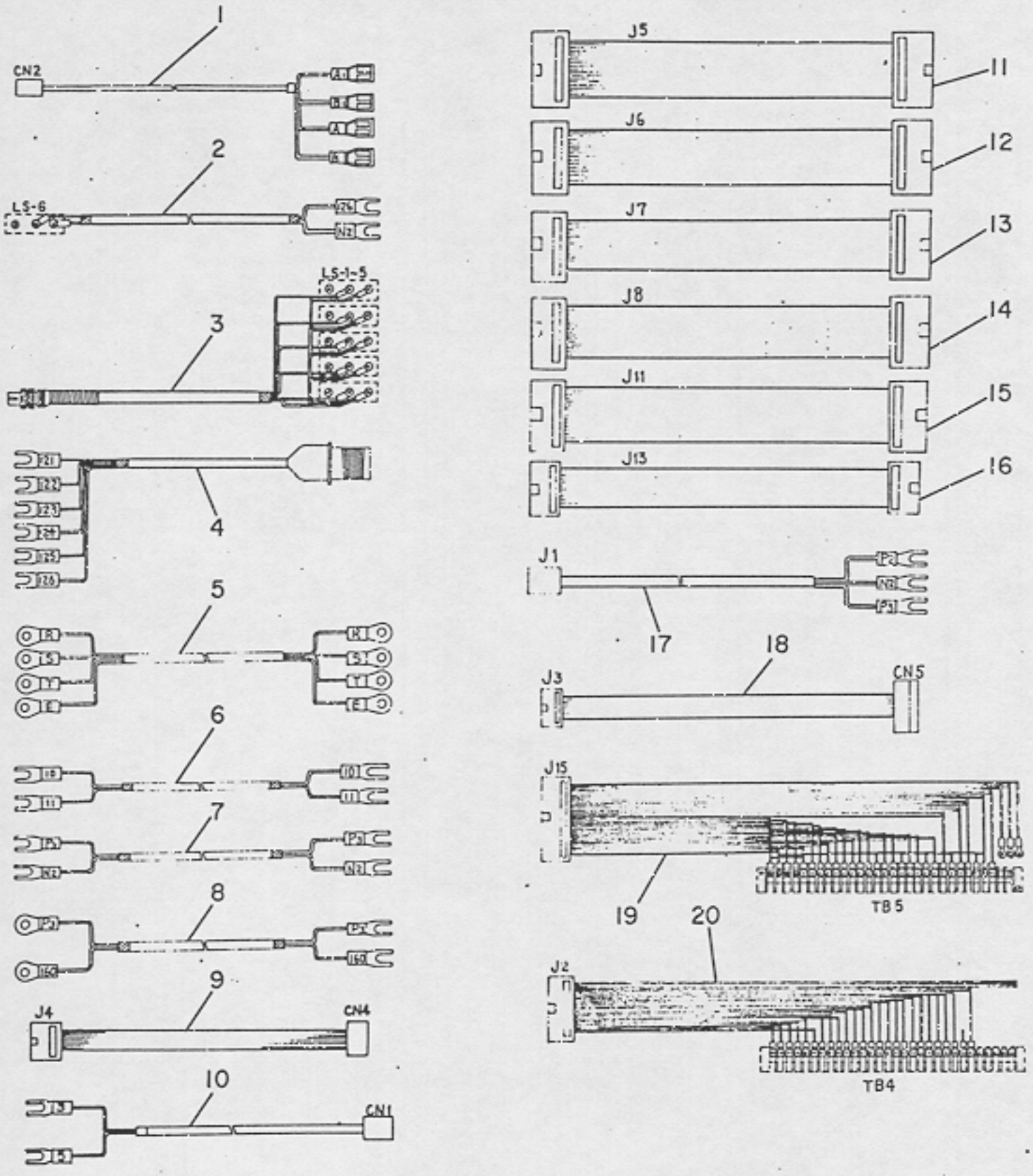

Ref. No.	Note 注記	Part No. 品番	Description	E. C. 変更年月	品名	Amt. Req. 数量
1		G6401-119-0A0	SERVOMOTOR CABLE ASM.		ｻｰﾎﾞﾓｰﾀ ｹｰﾌﾞﾙ ｸﾐ	1
2		G6402-119-0A0	LS-6 CABLE ASM.		LS-6 ｹｰﾌﾞﾙ ｸﾐ	1
3		G6403-119-0A0	PEDAL SWITCH CABLE ASM. 2		ｱｼﾌﾐｽｲｯﾁ ｹｰﾌﾞﾙ	1
4		G6404-119-0A0	PEDAL SWITCH CABLE ASM. 1		ｱｼﾌﾐｽｲｯﾁ ｹｰﾌﾞﾙ 1	1
5		G6405-119-0A0	POWER SOURCE CABLE ASM.		ﾃﾞﾝｹﾞﾝ ｹｰﾌﾞﾙ ｸﾐ	1
6		G6406-119-0A0	CROSS-MARK LAMP CABLE ASM.		ﾏｸﾞﾗｲﾄ ｹｰﾌﾞﾙ ｸﾐ	1
7		G6407-119-0A0	24V CABLE ASM.		24V ｹｰﾌﾞﾙ ｸﾐ	1
8		G6408-119-0A0	COUNTER CABLE ASM.		ｶｳﾝﾀ ｹｰﾌﾞﾙ ｸﾐ	1
9		G6409-119-0A0	CN4 CONNECTOR CABLE ASM.		CN4 ｹｰﾌﾞﾙ ｸﾐ	1
10		G6410-119-0A0	CN1 CONNECTOR CABLE ASM.		CN1 ｹｰﾌﾞﾙ ｸﾐ	1
11		G6117-119-0A0	J5 CONNECTOR CABLE ASM.		ｺﾈｸﾀｹｰﾌﾞﾙ J5 ｸﾐ	1
12		G6118-119-0A0	J6 CONNECTOR CABLE ASM.		ｺﾈｸﾀｹｰﾌﾞﾙ J6 ｸﾐ	1
13		G6119-119-0A0	J7 CONNECTOR CABLE ASM.		ｺﾈｸﾀｹｰﾌﾞﾙ J7 ｸﾐ	1
14		G6120-119-0A0	J8 CONNECTOR CABLE ASM.		ｺﾈｸﾀｹｰﾌﾞﾙ J8 ｸﾐ	1
15		G6121-119-0A0	J11 CONNECTOR CABLE ASM.		ｺﾈｸﾀｹｰﾌﾞﾙ J11 ｸﾐ	1
16		G6122-119-0A0	J13 CONNECTOR CABLE ASM.		ｺﾈｸﾀｹｰﾌﾞﾙ J13 ｸﾐ	1
17		G6411-119-0A0	J1 CONNECTOR CABLE ASM.		J1 ｹｰﾌﾞﾙ ｸﾐ	1
18		G6412-119-0A0	CN5 CONNECTOR CABLE ASM.		CN5 ｹｰﾌﾞﾙ ｸﾐ	1
19		G6413-119-0A0	J15 CONNECTOR CABLE ASM.		J15 ｹｰﾌﾞﾙ ｸﾐ	1
20		G6414-119-0A0	J2 CONNECTOR CABLE ASM.		J2 ｹｰﾌﾞﾙ ｸﾐ	1

2. OPERATION PANEL COMPONENTS
操作パネル関係

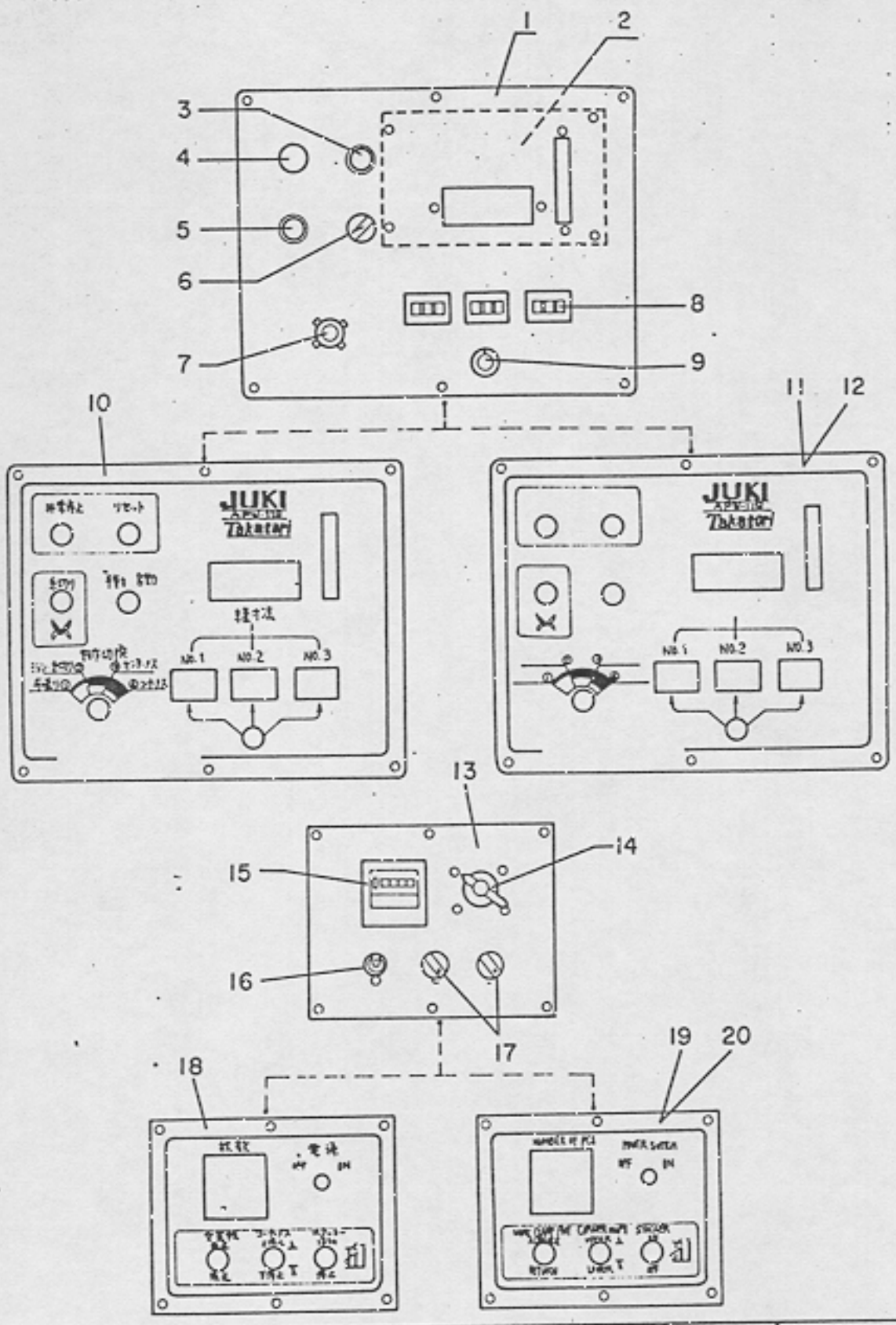

Ref. No.	Note 注記	Part No. 品番	Description	E. C. 変更年月	品名	Amt. Req. 数量
1		G6202-119-000	OPERATION PLATE 1		ソーサパン 1 プレート	1
2		G6105-119-0A0	DISPLAY CIRCUIT BOARD ASM.		ディスプレイキパン クミ	1
3		HA-0006900-AB	PUSH-BUTTON SWITCH		オシボタンスイッチ クミ	1
4		HA-0006700-A0	PUSH-BUTTON SWITCH		オシボタン スイッチ	1
5		HA-0006900-AA	PUSH-BUTTON SWITCH		オシボタンスイッチ クミ	1
6		HA-0007100-00	SELECTIVE SWITCH		セレクトスイッチ	1
7		HA-0006500-A0	ROTARY SWITCH		ロータリースイッチ クミ	1
8		HA-0007200-00	DIGITAL SWITCH		ディジタルスイッチ	9
9		HA-0006600-00	ROTARY SWITCH		ロータリスイッチ	1
10	◇01	G6203-119-J00	OPERATION PANEL 1		ソーキパン ケシヨウパネル	1
11	◇02	G6203-119-E00	OPERATION PANEL 1		ソーキパン ケシヨウパネル	1
12	◇03	G6203-119-G00	OPERATION PANEL 1		ソーキパン ケシヨウパネル	1
13		G6123-119-000	OPERATION PLATE 2		ソーサパン 2 プレート	1
14		HA-0006800-00	POWER SOURCE SWITCH		カムスイッチ	1
15		HB-0002400-00	COUNTER		セキサンカウンタ	1
16		HA-0002000-00	TOGGLE SWITCH		トグルスイッチ	1
17	*	HA-0007100-00	SELECTIVE SWITCH	D.01/84	HA-0009900-00	-
	*	HA-0009900-00	ROTARY SWITCH	A.01/84	ロータリスイッチ	2
18	◇01	G6124-119-J00	OPERATION PANEL 2		ソーサパン ケシヨウパネル	1
19	◇02	G6124-119-E00	OPERATION PANEL 2		ソーサパン ケシヨウパネル	1
20	◇03	G6124-119-G00	OPERATION PANEL 2		ソーサパン ケシヨウパネル	1

Note (注記) ◇01 ..... For Japanese 日本語用
◇02 ..... For English 英語用
◇03 ..... For German ドイツ語用

3. CONTROL BOX COMPONENTS
制御盤関係

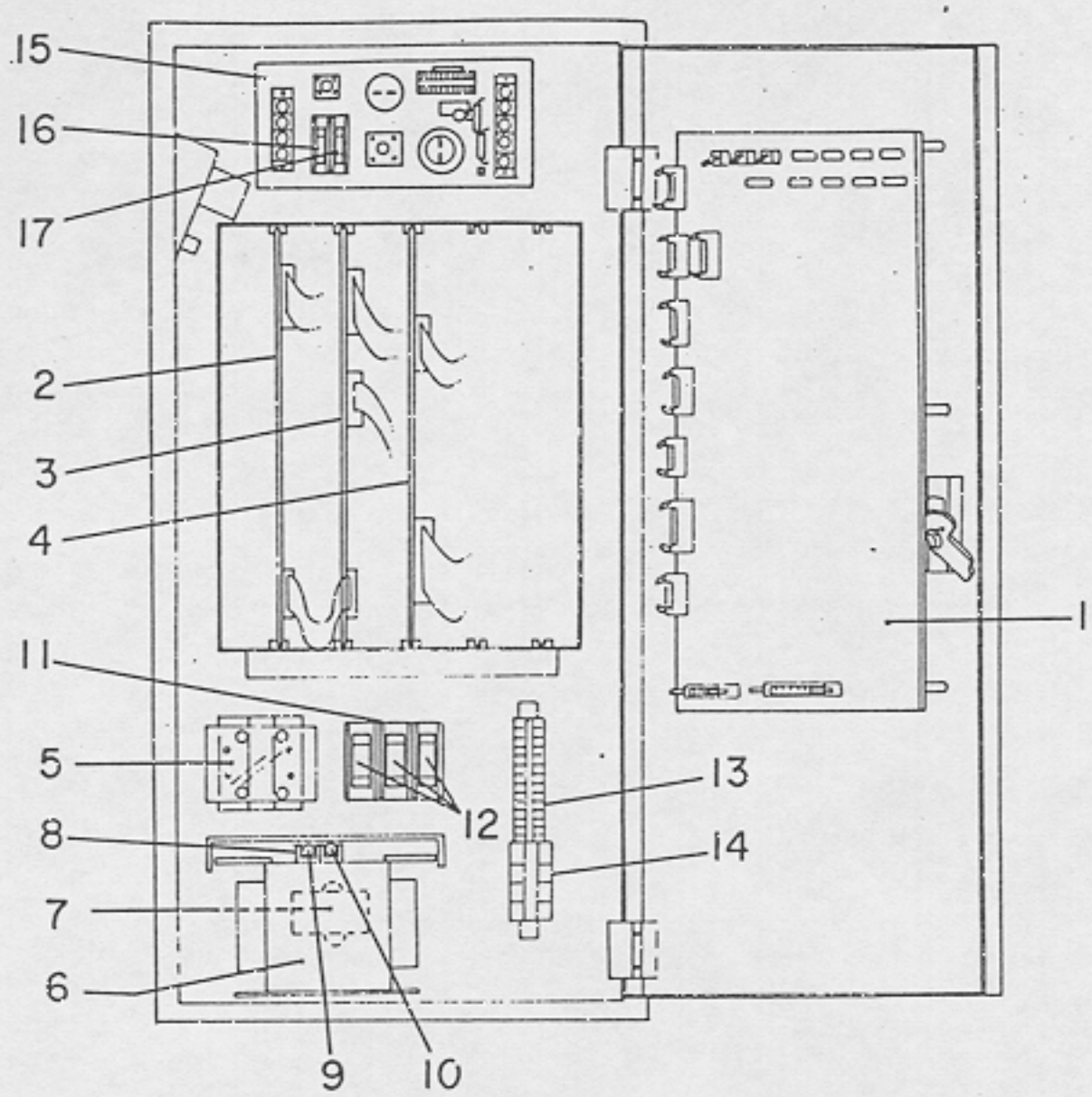

4. SERVOMOTOR DRIVE COMPONENTS
サーボモータードライバー関係

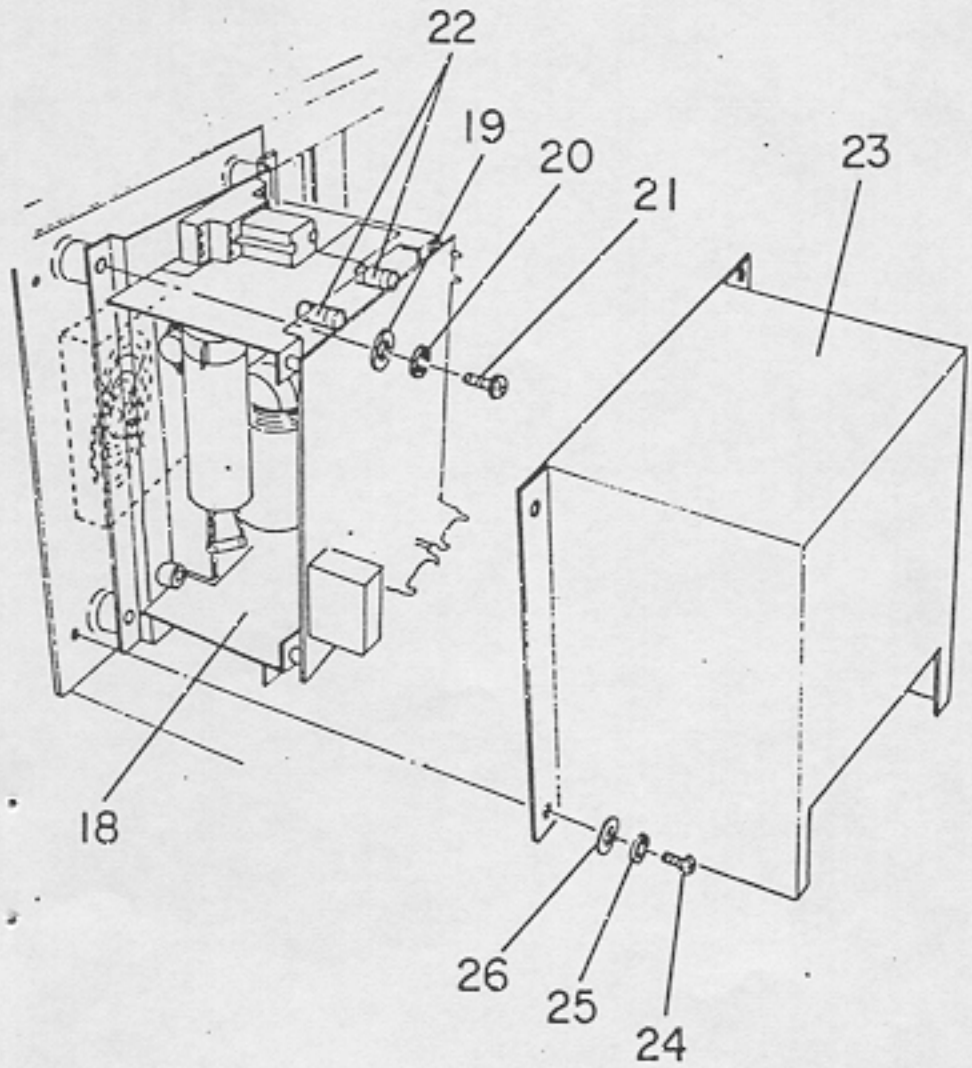

5. MOTOR COMPONENTS
モーター関係

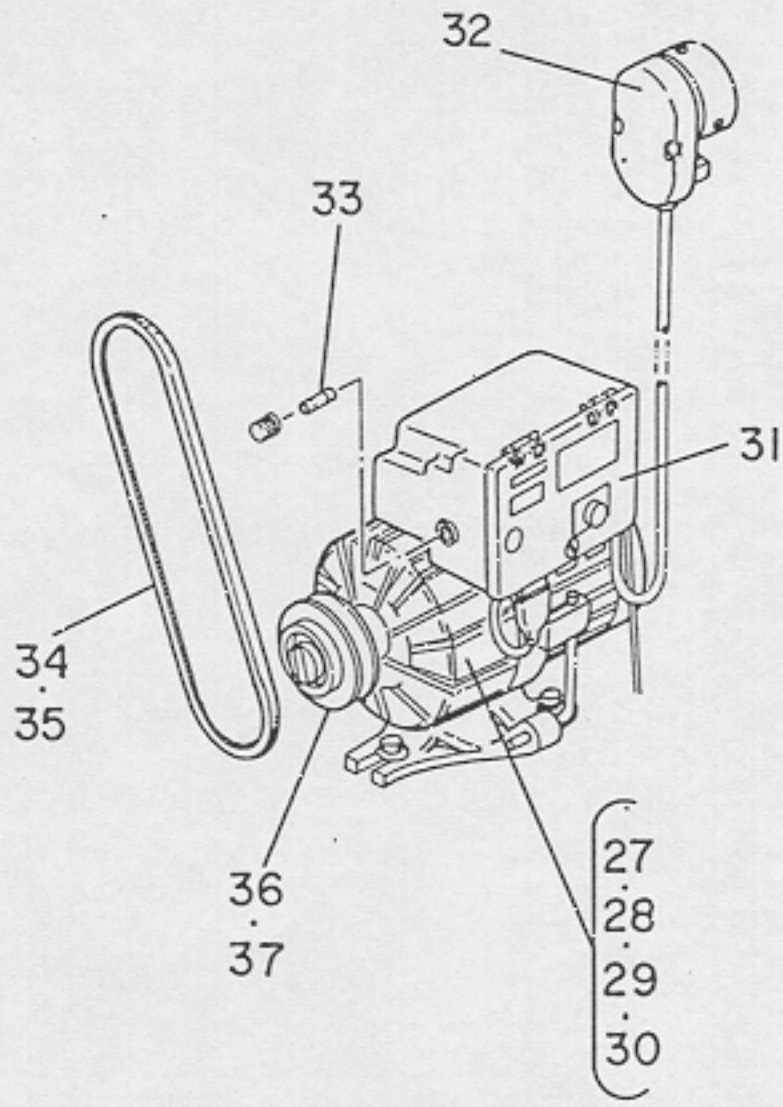

3. CONTROL BOX COMPONENTS
制御盤関係

Ref. No.	Note 注記	Part No. 品番	Description	E. C. 変更年月	品名	Amt. Req. 数量
1	*	G6101-119-0A0	CONTROL CIRCUIT BOARD ASM.	D.11/83	G6101-119-AA0	-
	*	G6101-119-AA0	CONTROL CIRCUIT BOARD ASM.	A.11/83	ｺﾝﾄﾛｰﾙ ｷﾊﾞﾝ ｸﾐ	1
2		G6102-119-0A0	OSCILLATION CIRCUIT BOARD ASM.		ﾊﾂｼﾝｷﾊﾞﾝ ｸﾐ	1
3		G6103-119-0A0	POSITIONING CIRCUIT BOARD ASM.		ｲﾁｷﾒｷﾊﾞﾝ ｸﾐ	1
4		G6104-119-0A0	OUTPUT CIRCUIT BOARD ASM.		ｼｭﾂﾘｮｸｷﾊﾞﾝ ｸﾐ	1
5		G6112-119-000	TRANSFORMER 2		ﾃﾞﾝｹﾞﾝ ﾄﾗﾝｽ	1
6		G6113-119-000	TRANSFORMER 1		ﾃﾞﾝｹﾞﾝ ﾄﾗﾝｽ	1
7		HN-0002800-00	NOISE FILTER		ﾉｲｽﾞﾌｨﾙﾀｰ	1
8		HF-0017110-00	FUSE HOLDER 2		ﾋｭｰｽﾞﾎﾙﾀﾞ	1
9		HF-0002005-00	FUSE 5A		ﾋｭｰｽﾞ 5A	1
10		HF-0002002-00	FUSE 2A		ﾋｭｰｽﾞ 2A	1
11	*	HF-0018115-00	FUSE HOLDER 1	D.01/84	HF-0025130-00	-
	*	HF-0025130-00	FUSE HOLDER 1	A.01/84	ﾋｭｰｽﾞﾎﾙﾀﾞ	3
12		HF-0018010-00	FUSE 10A		ﾋｭｰｽﾞ	3
13		HK-0183501-50	TERMINAL BLOCK		ﾀﾝｼﾀﾞｲ	10
14		HK-0183503-00	TERMINAL BLOCK		ﾀﾝｼﾀﾞｲ	4
15		G6106-119-0A0	DC POWER SOURCE UNIT		DC ﾃﾞﾝｹﾞﾝ ｸﾐ	1
16		HF-0002002-00	FUSE 2A		ﾋｭｰｽﾞ 2A	1
17		HF-0002005-00	FUSE 5A		ﾋｭｰｽﾞ 5A	1

4. SERVOMOTOR DRIVE COMPONENTS
サーボモータードライバー関係

18		HM-0001600-10	SERVOMOTOR DRIVE UNIT		ｻｰﾎﾞﾓｰﾀ ﾄﾞﾗｲﾊﾞｰS	1
19		WP-0531001-SC	WASHER		ﾋﾗｻﾞｶﾞﾈ ﾐｶﾞｷﾏﾙ M5	4
20		WS-0511302-KN	SPRING WASHER		ﾊﾞﾈｻﾞｶﾞﾈ	4
21		SM-4051201-SC	SCREW M5X0.8 L=12		ﾅﾍﾞﾈｼﾞ M5X0.8 L=12	4
22		HF-0002010-00	FUSE F-7161 10A		ﾋｭｰｽﾞ 10A	2
23		G6301-119-000	DRIVE UNIT COVER		ﾄﾞﾗｲﾊﾞｰｶﾊﾞｰ	1
24		SM-4051201-SC	SCREW M5X0.8 L=12		ﾅﾍﾞﾈｼﾞ M5X0.8 L=12	4
25		WS-0511302-KN	SPRING WASHER		ﾊﾞﾈｻﾞｶﾞﾈ	4
26		WP-0531001-SC	WASHER		ﾋﾗｻﾞｶﾞﾈ ﾐｶﾞｷﾏﾙ M5	4

5. MOTOR COMPONENTS
モーター関係

27	◇01	M8401-180-AAP	MOTOR ASM. 3-PHASE 200V		MCﾓｰﾀ 3P 200V	1
28	◇02	M8401-181-AAP	MOTOR ASM. 3-PHASE 220V-250V		MCﾓｰﾀ 3P 220-250	1
29	◇03	M8401-182-AAP	MOTOR ASM. 3-PHASE 380V-440V		MCﾓｰﾀ 3P 380-440	1
30	◇04	M8401-182-BAP	MOTOR ASM. 1-PHASE 220V-250V		MCﾓｰﾀ 1P 220-250	1
31	◇05	M0011-050-AA0	CONTROL BOX ASM.		PSC ﾕﾆｯﾄ A ｸﾐ	1
32		M8512-120-BA0-A	SYNCHRONIZER ASM.		BBｼｷ ｼﾝｸﾛﾅｲｻﾞ ｸﾐ	1
33		M9633-110-000	FUSE 5A		ﾋｭｰｽﾞ 5A	1
34	◇06	MTJ-VM005600	V-BELT, 56 INCH		Vﾍﾞﾙﾄ 56ｲﾝﾁ	1
35	◇07	MTJ-VM005800	V-BELT, 58 INCH		Vﾍﾞﾙﾄ 58ｲﾝﾁ	1
36	◇06	MTS-P00850A0	MOTOR PULLEY ASM. 80. 60HZ		ﾓｰﾀﾌﾟｰﾘ P.C.D 80 ｸﾐ	1
37	◇07	MTS-P01050A0	MOTOR PULLEY ASM. P.C.D. 105		ﾓｰﾀﾌﾟｰﾘ ｸﾐ P.C.D	1

Note (注記)	◇01 ..... For 3-phase 200V	3相 200V用
	◇02 ..... For 3-phase 220 ~ 250V	3相 220～250V用
	◇03 ..... For 3-phase 380 ~ 440V	3相 380～440V用
	◇04 ..... For 1-phase 220 ~ 250V	単相 220～250V用
	◇05 ..... For 200V, 220 ~ 250V, 380 ~ 440V	200V、220～250V、380～440V用
	◇06 ..... For 60 Hz	60HZ用
	◇07 ..... For 50 Hz	50HZ用

1. FRAME & MISCELLANEOUS COVER COMPONENTS

頭部・外装関係

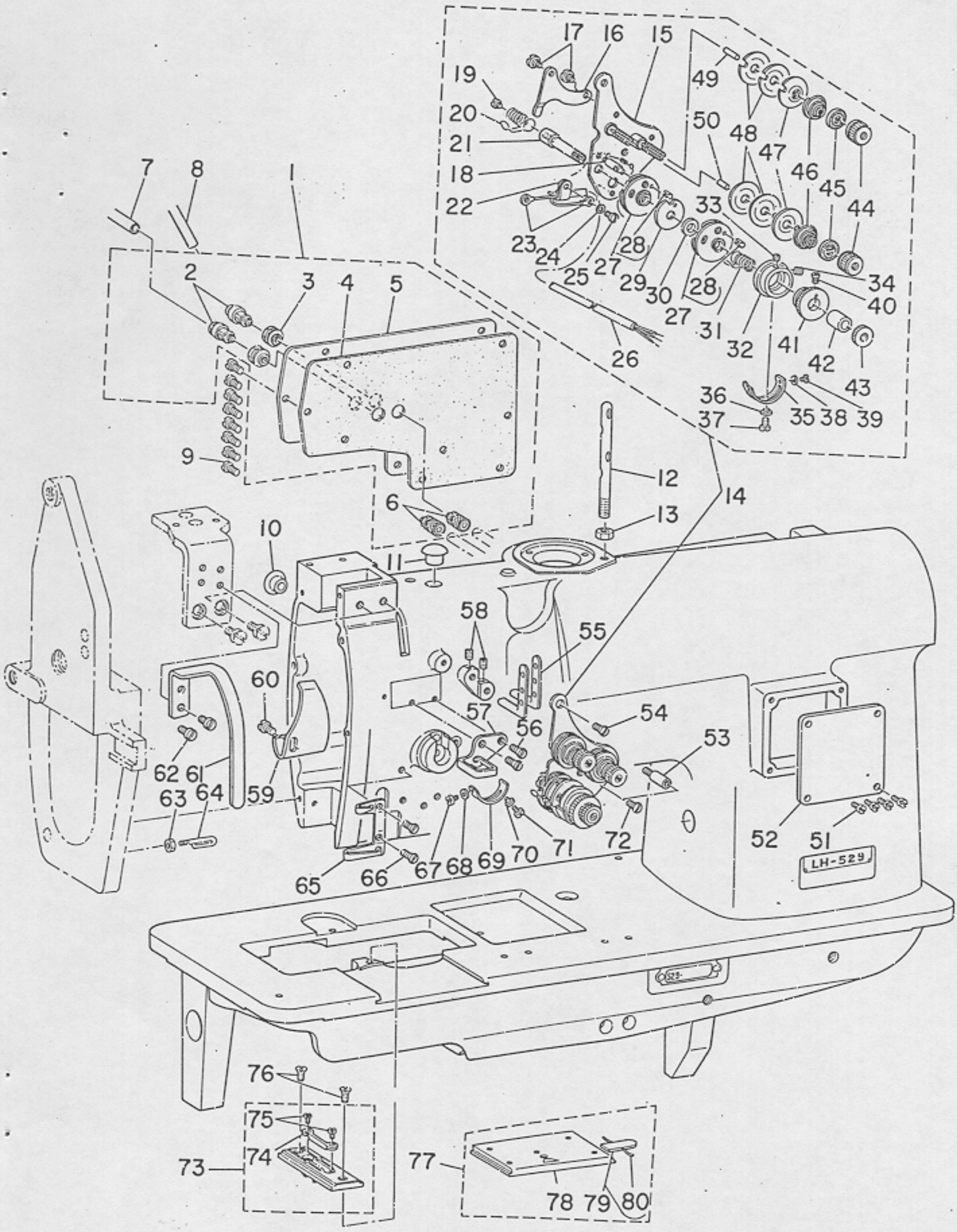

Ref. No.	Note 注記	Part No. 品番	Description	E. C. 変更年月	品名	Amt. Req. 数量
1		G1118-119-0A0	SIDE PLATE ASM.		ﾏﾄﾞｲﾀ ｸﾐ	1
2		PJ-3010405-02	HALF UNION 4XM5		ﾊｰﾌﾕﾆｵﾝ 4XM5	(2)
3		G5682-116-C00	UNION		ｶｸﾍｷﾕﾆｵﾝ	(2)
4		G1119-119-000	SIDE PLATE GASKET		ﾏﾄﾞｲﾀﾊﾟｯｷﾝ	(1)
5		G1118-119-000	SIDE PLATE		ﾏﾄﾞｲﾀ	(1)
6		G5605-116-000	HOSE NIPPLE		ﾎｰｽﾆｯﾌﾟﾙ	(2)
7		BT-0400251-EA	TUBE HOSE, BLUE		ｳﾚﾀﾝﾎｰｽ ｱｵ	0.5
8		BT-0400251-EC	TUBE HOSE, YELLOW		ｳﾚﾀﾝﾎｰｽ ｷ	0.5
9		SS-7111120-SP	SCREW 11/64-40 L=10.5		ﾏﾙﾋﾗﾈｼﾞ 11/64-40 L=10.5	8
10		TA-1050504-R0	RUBBER PLUG		ﾄﾒｾﾝ	1
11		TA-1250406-R0	RUBBER PLUG		ﾄﾒｾﾝ D=12.5 L=4	1
12		B1114-051-000	NEEDLE THREAD GUIDE PIN		ｲﾄｱﾝﾅｲﾎﾟｰ	1
13		NS-6620310-SP	NUT 3/16-32		ﾛｯｶｸﾅｯﾄ 3/16-32	1
14		G3121-116-0B0	THREAD TENSION BASE PLATE ASM.		ｲﾄﾁｮｰｼﾀﾞｲｲﾀ ｸﾐ	1
15		G3121-116-0A0	THREAD TENSION BASE PLATE ASM.		ｲﾄﾁｮｰｼﾀﾞｲｲﾀ ｸﾐ	(1)
16		B3134-521-000	TENSION RELEASE LEVER		ｲﾄﾕﾙﾒｲﾀ	(1)
17		SD-0470281-SP	HINGE SCREW D=4.7 H=2.8		ﾀﾞﾝﾈｼﾞ D=4.7 H=2.8	(2)
18		B3143-527-000	TAKE-UP SPRING GUIDE STUD		ｲﾄﾄﾘﾊﾞﾈ ｶｹﾄﾞﾀﾞｲｼﾞｸ	(1)
19		SS-6090540-SP	SCREW 9/64-40 L= 5.0		ﾋﾗﾈｼﾞ 9/64-40 L=5	(1)
20		G3126-116-000	THREAD TAKE-UP SPRING		ｲﾄﾄﾘﾊﾞﾈ	(1)
21		G3123-116-000	THREAD TAKE-UP SPRING STUD		ｲﾄﾄﾘﾊﾞﾈｼﾞｸ	(1)
22		G5066-110-000	CORD HOLDER		3ﾏﾙ ﾖｰ ｹｰﾌﾞﾙｵｻｴ	(1)
23		HP-1A30PAA-12	SOLDERLESS TERMINAL		ｱｯﾁｬｸﾀﾝｼ(ﾏﾙｶﾞﾀ)#321017	(2)
24		WP-0371036-SD	WASHER 3.7X6X1		ﾋﾗｻﾞｶﾞﾈ 3.7X6X1	(1)
25		SS-7090710-SP	SCREW 9/64-40 L= 6.8		ﾏﾙﾋﾗﾈｼﾞ 9/64-40 L=6.8	(1)
26		G3199-116-0A0	CORD ASM.		ｳﾜｲﾄｷﾞﾚ ｹﾝｼｭｯｺｰﾄﾞ ｸﾐ	(1)
27		G3137-116-0A0	TAKE-UP SPRING GUIDE ASM.		ｲﾄﾄﾘﾊﾞﾈ ｲﾄｱﾝﾅｲ ｸﾐ	(2)
28		PS-0250052-KP	SPRING PIN		ｽﾌﾟﾘﾝｸﾞﾋﾟﾝ	(2)
29		G3142-116-C00	TAKE-UP SPRING GUIDE PLATE		ｲﾄﾄﾘﾊﾞﾈ ｱﾝﾅｲｲﾀ	(1)
30		B3139-527-000	COLLAR		ｲﾄﾄﾘﾊﾞﾈ ｼﾞｸｶﾗｰ	(1)
31		G3128-116-000	THREAD TAKE-UP SPRING		ｲﾄﾄﾘﾊﾞﾈ B	(1)
32		B3140-527-000	THREAD TENSION POST		ｲﾄﾄﾘﾊﾞﾈ ｶｹﾄﾞﾀﾞｲ	(1)
33		SS-8080410-TP	SCREW 1/8-44 L=3.5		ﾄﾒﾈｼﾞ 1/8-44 L=3.5	(1)
34		SS-8080610-SP	SCREW 1/8-44 L=5.5		ﾄﾒﾈｼﾞ 1/8-44 L=5.5	(1)
35		G3139-116-C00	TAKE-UP SPRING ADJUSTING PLATE		ｲﾄﾄﾘﾊﾞﾈ ﾁｮｰｾﾂｲﾀ	(1)
36		G3197-116-C00	INSULATING BUSHING		ﾁｮｰｾﾂｲﾀ ｾﾞﾂｴﾝﾌﾞｼｭ	(1)
37		SS-7090710-SP	SCREW 9/64-40 L= 6.8		ﾏﾙﾋﾗﾈｼﾞ 9/64-40 L=6.8	(1)
38		WP-0250516-SD	WASHER 2.5X6X0.5		ﾋﾗｻﾞｶﾞﾈ 2.5X6X0.5	(1)
39		SS-6060220-SP	SCREW 3/32-56 L= 2.0		ﾋﾗﾈｼﾞ 3/32-56 L=2	(1)
40		SM-4020801-SD	SCREW M2 L=8		ﾅﾍﾞｺﾈｼﾞ M2 L=8	(1)
41		G3125-116-000	TAKE-UP SPRING GUIDE		ｲﾄﾄﾘﾊﾞﾈｶｹ	(1)
42		B3141-527-000	PRESSER COLLAR		ｲﾄﾄﾘﾊﾞﾈ ｱﾝﾅｲｵｻｴ	(1)
43		B3125-012-000	THREAD TENSION STUD NUT		ｲﾄﾁｮｰｼ ﾅｯﾄ	(1)
44		B3116-512-0CB	TENSION NUT B		ｲﾄﾁｮｰｼ ﾅｯﾄ B	(2)
45		B3120-125-000	TENSION DISC STOPPER		ｲﾄﾁｮｰｼｻﾗ ｶｲﾃﾝﾄﾒ	(2)
46		B3129-526-000	TENSION SPRING (1.2)		ｲﾄﾁｮｰｼ ﾊﾞﾈ (1.2)	(2)
47		B3132-051-000	TENSION DISC HOLDER		ｲﾄﾁｮｰｼｻﾗ ｵｻｴ	(2)
48		B3126-051-000	TENSION DISC		ｲﾄﾁｮｰｼ ｻﾗ	(4)
49		B3127-051-000	TENSION RELEASE PIN, SHORT		ｲﾄﾕﾙﾒ ﾋﾟﾝ	(1)
50		B3127-527-000	PIN B		ｲﾄﾕﾙﾒ ﾋﾟﾝ B	(1)
51		SS-5110810-SP	SCREW 11/64-40 L=8		ﾄﾗｽﾈｼﾞ 11/64-40 L=8	4
52		B1153-528-000	SIDE PLATE		ｿｸﾒﾝｲﾀ	1
53		G5614-117-000	THREAD TENSION BASE PIN		ｲﾄﾁｮｳｼﾀﾞｲｼﾞｸ	1
54		SS-2090710-SP	SCREW 9/64-40 L=7		ﾏﾙｻﾗﾈｼﾞ 9/64-40 L=7	1
55		B1128-522-000	THREE HOLE THREAD EYELET		ﾐﾂﾒｲﾄｶｹ	2
56		SS-2090710-SP	SCREW 9/64-40 L=7		ﾏﾙｻﾗﾈｼﾞ 9/64-40 L=7	2
57		B1129-521-000	THREAD GUIDE, UPPER		ｲﾄｱﾝﾅｲ (ｳｴ)	1
58		SS-8110510-SP	SCREW 11/64-40 L=5		ﾄﾒﾈｼﾞ 11/64-40 L=5	2
59		B1140-526-000	TAKE-UP OIL SPLASHER		ﾃﾝﾋﾟﾝ ﾕﾎﾟｰﾊﾞﾝ	1
60		SS-3090610-SP	SCREW 9/64-40 L=6		ﾏﾙﾈｼﾞ 9/64-40 L=6	1
61		G1103-117-000	THREAD TAKE-UP LEVER COVER		ﾃﾝﾋﾟﾝｶﾊﾞｰ	1
62		SS-5110810-SP	SCREW 11/64-40 L=8		ﾄﾗｽﾈｼﾞ 11/64-40 L=8	2
63		NS-6060310-SP	NUT 3/32-56		ﾛｯｶｸﾅｯﾄ 3/32-56	1
64		B1121-512-000	FRAME THREAD GUIDE		ｱｰﾑ ｲﾄｶｹ	1
65		G1104-117-000	THREAD GUIDE, LOWER		ｲﾄｱﾝﾅｲ ｼﾀ	1
66		SS-2090710-SP	SCREW 9/64-40 L=7		ﾏﾙｻﾗﾈｼﾞ 9/64-40 L=7	2
67		SS-6060220-SP	SCREW 3/32-56 L= 2.0		ﾋﾗﾈｼﾞ 3/32-56 L=2	1
68		WP-0250516-SD	WASHER 2.5X6X0.5		ﾋﾗｻﾞｶﾞﾈ 2.5X6X0.5	1
69		G3138-116-000	TAKE-UP SPRING ADJUSTING PLATE		ｲﾄﾄﾘﾊﾞﾈ ｱﾝﾅｲﾁｮｰｾﾂｲﾀ	1
70		G3197-116-C00	INSULATING BUSHING		ﾁｮｰｾﾂｲﾀ ｾﾞﾂｴﾝﾌﾞｼｭ	1
71		SS-7090710-SP	SCREW 9/64-40 L= 6.8		ﾏﾙﾋﾗﾈｼﾞ 9/64-40 L=6.8	1
72		SS-2090710-SP	SCREW 9/64-40 L=7		ﾏﾙｻﾗﾈｼﾞ 9/64-40 L=7	1
73	◇01	G1109-116-AA0	THROAT PLATE ASM., A		ﾊﾘｲﾀ 10 ｸﾐ	1
74		G1110-116-000	FIXED BLADE		ｺﾃｲﾒｽ	(1)
75		SS-6080320-SP	SCREW 1/8-44 L= 2.5		ﾋﾗﾈｼﾞ 1/8-44 L=2.5	(2)
76		SS-2110915-TP	SCREW 11/64-40 L=8.9		ﾏﾙｻﾗﾈｼﾞ 11/64-40 L=8.9	2
77		B1110-051-CA0	BED SLIDE ASM.		ｽﾍﾞﾘｲﾀ ｸﾐ	1
78		B1110-051-000	BED SLIDE		ｽﾍﾞﾘｲﾀ	(1)
79		B1111-051-CA0	BED THROAT SPRING ASM.		ｽﾍﾞﾘｲﾀ ﾊﾞﾈ ｸﾐ	(1)
80		B1111-051-CC0	SPRING		ｽﾍﾞﾘｲﾀ ﾊﾞﾈ	(1)

Note (注記) ◇01 ..... Please refer to the table of exchanging parts on page 60.

60ページの交換部品一覧表をご参照下さい。

2. MAIN SHAFT COMPONENTS

上軸関係

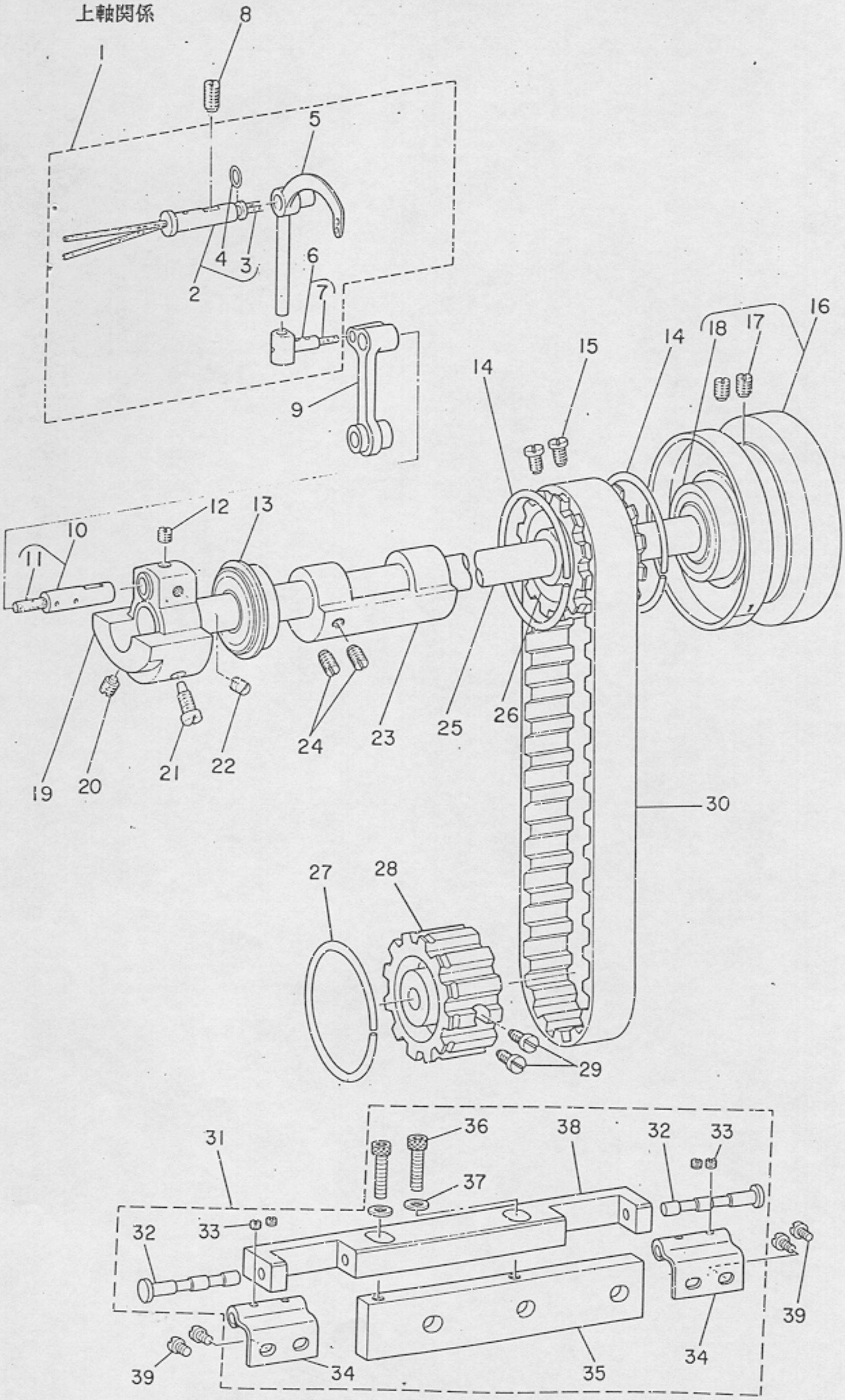

Ref. No.	Note 注記	Part No. 品番	Description	E. C. 変更年月	品名	Amt. Req. 数量
1		B1905-528-0A0	THREAD TAKE-UP LEVER ASM.		ﾃﾝﾋﾞﾝ ｸﾐ	1
2		B1906-528-0A0	THREAD TAKE-UP LEVER PIN ASM.		ﾃﾝﾋﾞﾝｻｻｴｼﾞｸ ｸﾐ	(1)
3		CQ-2020000-00	OIL WICK		ﾕｼﾝ	(0.3)
4		RO-0371801-00	RUBBER RING		Oﾘﾝｸﾞ	(1)
5		B1905-528-000	THREAD TAKE-UP LEVER		ﾃﾝﾋﾞﾝ	(1)
6		B1907-526-0A0	TAKE-UP LEVER THRUST PIN ASM.		ﾃﾝﾋﾞﾝ ｽﾗｲﾄﾞｼﾞｸ ｸﾐ	(1)
7		CQ-2020000-00	OIL WICK		ﾕｼﾝ	(0.1)
8		SS-8151550-SP	SCREW 15/64-28 L=15		ﾄﾒﾈｼﾞ 15/64-28 L=15	1
9		B1408-526-000	NEEDLE BAR CRANK ROD		ﾊﾘﾎﾞｰ ｸﾗﾝｸﾛｯﾄﾞ	1
10		B1210-526-0A0	NEEDLE BAR CRANK PIN ASM.		ﾊﾘﾎﾞｰ ｸﾗﾝｸﾋﾟﾝ ｸﾐ	1
11		CQ-3030000-00	OIL WICK		ﾕｼﾝ	0.1
12		SS-8680540-SP	SCREW 9/32-28 L= 4.5		ﾄﾒﾈｼﾞ 9/32-28 L=4.5	1
13		B1202-512-000	MAIN SHAFT BUSHING, FRONT		ｳﾜｼﾞｸ ﾏｴﾍﾞｱﾘﾝｸﾞ	1
14		B1214-019-000	SPROCKET RING		ｽﾌﾟﾛｹｯﾄ ﾘﾝｸﾞ	2
15		SS-6661110-SP	SCREW 1/4-40 L=11		ﾋﾗﾈｼﾞ 1/4-40 L=11	2
16		GAC-01031AA0	HAND WHEEL ASM.		ﾊｽﾞﾐｸﾞﾙﾏ ｸﾐ	1
17		SS-8151550-SP	SCREW 15/64-28 L=15		ﾄﾒﾈｼﾞ 15/64-28 L=15	(2)
18		B1203-512-000	MAIN SHAFT BUSHING, REAR		ｳﾜｼﾞｸ ｳｼﾛﾍﾞｱﾘﾝｸﾞ	(1)
19		B1206-528-000	COUNTERWEIGHT		ﾂﾘｱｲｵﾓﾘ	1
20		SS-8681650-TP	SCREW 9/32-28 L=16		ﾄﾒﾈｼﾞ 9/32-28 L=16	1
21		SS-7681750-TP	SCREW 9/32-28 L=16.5		ﾏﾙﾋﾗﾈｼﾞ 9/32-28 L=16.5	1
22		SS-8680730-SP	SCREW 9/32-28 L=7		ﾄﾒﾈｼﾞ 9/32-28 L=7	1
23		B1207-528-000	AUXILIARY COUNTERWEIGHT		ﾎｼﾞｮ ﾂﾘｱｲｵﾓﾘ	1
24		SS-8681130-SP	SCREW 9/32-28 L=11		ﾄﾒﾈｼﾞ 9/32-28 L=11	2
25		B1201-528-000	MAIN SHAFT		ｳﾜｼﾞｸ	1
26		B1302-512-000	SPROCKET WHEEL, UPPER		ｳﾜｽﾌﾟﾛｹｯﾄ	1
27		B1214-019-000	SPROCKET RING		ｽﾌﾟﾛｹｯﾄ ﾘﾝｸﾞ	1
28		B1303-512-000	SPROCKET WHEEL, LOWER		ｼﾀｽﾌﾟﾛｹｯﾄ	1
29		SS-6661110-SP	SCREW 1/4-40 L=11		ﾋﾗﾈｼﾞ 1/4-40 L=11	2
30		B1301-051-000	TIMING BELT		ﾀｲﾐﾝｸﾞﾍﾞﾙﾄ	1
31		G8213-117-0A0	HINGE BLOCK ASM.		ﾋﾝｼﾞｻﾞ ｸﾐ	1
32		G8215-119-000	HINGE PIN		ﾋﾝｼﾞｼﾞｸ	(2)
33		SS-8110320-SP	SCREW 11/64-40 L= 3.2		ﾄﾒﾈｼﾞ 11/64-40 L=3.2	(4)
34		G8214-119-000	HINGE		ﾋﾝｼﾞ	(2)
35		G8220-117-000	HINGE BLOCK BASE		ﾋﾝｼﾞｻﾞﾄﾞﾀﾞｲ	(1)
36		SM-6082002-TP	SCREW M8 L=20		ﾛｯｶｸｱﾅﾎﾞﾙﾄ	(2)
37		WP-0850002-SP	WASHER 8.5X18X1.6		ﾋﾗｻﾞｶﾞﾈ 8.5X18X1.6	(2)
38		G8213-117-000	HINGE BLOCK		ﾋﾝｼﾞｻﾞ	(1)
39		SS-7680870-SP	SCREW 9/32 L= 8.0		ﾏﾙﾋﾗﾈｼﾞ 9/32-28 L=8	4

3. NEEDLE BAR COMPONENTS

針棒関係

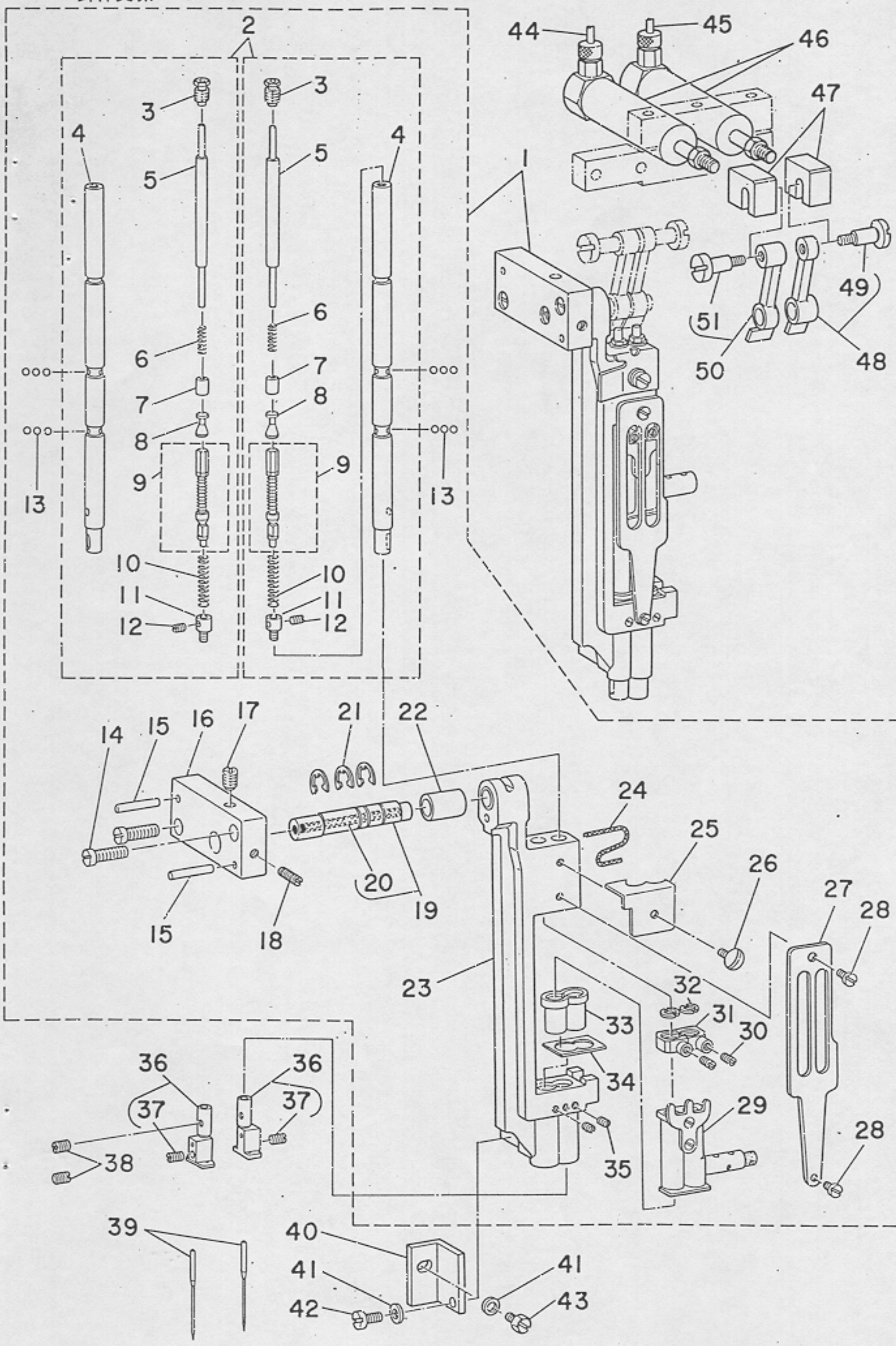

Ref. No.	Note 注記	Part No. 品番	Description	E. C. 変更年月	品名	Amt. Req. 数量
1		G1406-117-0C0	NEEDLE BAR FRAME ASM.		ﾊﾘﾎﾞｰﾖｳﾄﾞｳﾀﾞｲ ｸﾐ	1
2		G1401-117-0A0	NEEDLE BAR ASM.		ﾊﾘﾎﾞｳ ｸﾐ	(2)
3		B1404-526-000	PLUG SCREW		ﾊﾘﾎﾞｰ ﾌﾀﾈｼﾞ	(2)
4		G1401-117-000	NEEDLE BAR		ﾊﾘﾎﾞｳ	(2)
5		B1405-526-000	PRESS BAR		ﾊﾘﾃｰｼ ｵｼﾎﾞｰ	(2)
6		B1406-526-000	SPRING		ﾊﾘﾃｰｼ ｵｼﾎﾞｰ ｽﾘｰﾌﾞ ﾊﾞﾈ	(2)
7		B1407-526-000	PRESS BAR SLEEVE		ﾊﾘﾃｰｼ ｵｼﾎﾞｰ ｽﾘｰﾌﾞ	(2)
8		B1409-526-000	BALL SLIDE STUD		ﾊﾘﾃｰｼ ﾎﾞｰﾙ ｽﾗｲﾄﾞｼﾞｸ	(2)
9		B1412-526-0A0	ADJUSTING SLIDE STUD ASM.		ﾊﾘﾃｰｼ ﾁｮｰｾﾝｽﾗｲﾄﾞｼﾞｸ ｸﾐ	(2)
10		B1415-526-C00	SPRING		ﾊﾘﾃｰｼ ｱﾂｼｸﾊﾞﾈ	(2)
11		G1403-117-000	ANCHOR		ﾊﾞﾈｳｹ	(2)
12		SS-8080650-TP	SCREW 1/8-44 L=6		ﾄﾒﾈｼﾞ 1/8-44 L=6	(2)
13		B1410-526-000	BALL		ﾊﾘﾃｰｼ ﾎﾞｰﾙ	(12)
14		SS-7111310-SP	SCREW 11/64-40 L=12.8		ﾏﾙﾋﾗﾈｼﾞ 11/64-40 L=12.8	(2)
15		PT-0301800-S0	TAPERED PIN 3X18		ﾃｰﾊﾟﾋﾟﾝ 3X18	(2)
16		G1409-117-000	NEEDLE BAR FRAME A		ﾊﾘﾎﾞｳ ﾖｳﾄﾞｳﾀﾞｲ A	(1)
17		SS-8110750-SP	SCREW 11/64-4C L= 6.5		ﾄﾒﾈｼﾞ 11/64-4C L=6.5	(1)
18		SS-8111610-SP	SCREW 11/64-4C L=15.5		ﾄﾒﾈｼﾞ 11/64-40 L=15.5	(1)
19		G1408-117-0A0	NEEDLE BAR FRAME SHAFT ASM.		ﾖｳﾄﾞｳﾀﾞｲｼﾞｸ ｸﾐ	(1)
20		CQ-2520000-00	OIL WICK		ﾕｼﾝ	(0.1)
21		RE-0700000-K0	SNAP RING 7		Eｶﾞﾀﾄﾒｳ 7	(3)
22		B1452-526-000	NEEDLE BAR FRAME BUSHING		ﾊﾘﾎﾞｰ ﾖｰﾄﾞｰﾀﾞｲ ﾒﾀﾙ	(1)
23		G1406-117-0C0	NEEDLE BAR FRAME		ﾊﾘﾎﾞｳ ﾖｳﾄﾞｳﾀﾞｲ	(1)
24		CQ-3030000-0C	OIL WICK		ﾕｼﾝ	(0.1)
25		B1450-528-000	OIL WICK RETAINER		ﾕｼﾝｵｻｴ	(1)
26		SS-5090420-SP	SCREW 9/64-40 L=3.5		ﾄﾗｽﾈｼﾞ 9/64-4C L=3.5	(1)
27		B1423-526-000	NEEDLE BAR GUIDE PLATE		ﾊﾘﾎﾞｰ ｱﾝﾅｲｲﾀ	(1)
28		SS-6090510-SP	SCREW 9/64-40 L=5		ﾋﾗﾈｼﾞ 9/64-40 L=5	(2)
29		B1420-526-0A0	NEEDLE BAR BRACKET ASM.		ﾊﾘﾎﾞｰﾀﾞｷ ｸﾐ	(1)
30		SS-7090910-TP	SCREW 9/64-40 L= 8.5		ﾏﾙﾋﾗﾈｼﾞ 9/64-40 L=8.5	(2)
31		G1405-117-000	NEEDLE BAR FIXED PIN		ﾊﾘﾎﾞｳｺﾃｲｼﾞｸ	(2)
32		G1404-117-C00	HALF RING		ﾊｰﾌﾘﾝｸ	(4)
33		B1510-526-C0C-A	NEEDLE BAR LOWER BUSHING		ﾊﾘﾎﾞｰｼﾀﾒﾀﾙ	(2)
34	◇01	B1453-526-008	THRUST PLATE T=0.6		ｼﾀﾒﾀﾙ ｽﾗｽﾄｲﾀ T=0.6	(1)
35		SS-8080310-SP	SCREW 1/8-44 L= 2.8		ﾄﾒﾈｼﾞ 1/8-44 L=2.8	(2)
36	◇02	G1402-117-BA0	NEEDLE CLAMP ASM.		ﾊﾘﾄﾞﾒ ｸﾐ	2
37		SS-8080660-TP	SCREW 1/8-44 L=5.5		ﾄﾒﾈｼﾞ 1/8-44 L=5.5	(2)
38		B1425-526-000	SCREW 1/8-44 L=6		ﾊﾘﾄﾞﾒﾄﾒﾈｼﾞ	2
39	◇01	MDP-170B1600	NEEDLE DPX17 #16		ﾊﾘ	2
40		G1407-117-000	NEEDLE BAR FRAME GUIDE		ﾖｳﾄﾞｳﾀﾞｲ ｱﾝﾅｲ	1
41		WP-0480856-SP	WASHER 4.8X8.4X0.8		ﾋﾗｻﾞｶﾞﾈ 4.8X8.4X0.8	2
42		SS-711C740-SP	SCREW 11/64-4C L= 7.0		ﾏﾙﾋﾗﾈｼﾞ 11/64-4C L=7	1
43		SS-9111010-SP	SCREW 11/64-4C L=9.5		ﾛｯｶｸﾎﾞﾙﾄ 11/64-40 L=9.5	1
44		BY-0400251-ED	TUBE HOSE, GREEN		ｳﾚﾀﾝﾎｰｽ ﾐﾄﾞﾘ	0.2
45		BT-040C251-ED	TUBE HOSE, GREEN		ｳﾚﾀﾝﾎｰｽ ﾐﾄﾞﾘ	0.2
46		PA-1502001-A0	AIR CYLINDER		ｴｱｼﾘﾝﾀﾞ	2
47		G5605-117-000	CYLINDER JOINT		ｼﾘﾝﾀﾞ ｼﾞｮｲﾝﾄ	2
48		G5603-117-0A0	ROD ASM. A		ﾊﾘｷﾘｶｴﾛｯﾄﾞ A ｸﾐ	1
49		SD-0551101-TP	HINGE SCREW		ﾀﾞﾝﾈｼﾞ	(1)
50		G5604-117-0A0	ROD ASM. B		ﾊﾘｷﾘｶｴﾛｯﾄﾞ B ｸﾐ	1
51		SD-0551101-TP	HINGE SCREW		ﾀﾞﾝﾈｼﾞ	(1)

Note (注記) ◇01 ..... Selective part
◇02 ..... Please refer to the table of exchanging parts on page 60.

選択部品
60ページの交換部品一覧表をご参照下さい。

4. NEEDLE THREAD TRIMMER & CLIP COMPONENTS

上糸切り・上糸つかみ関係

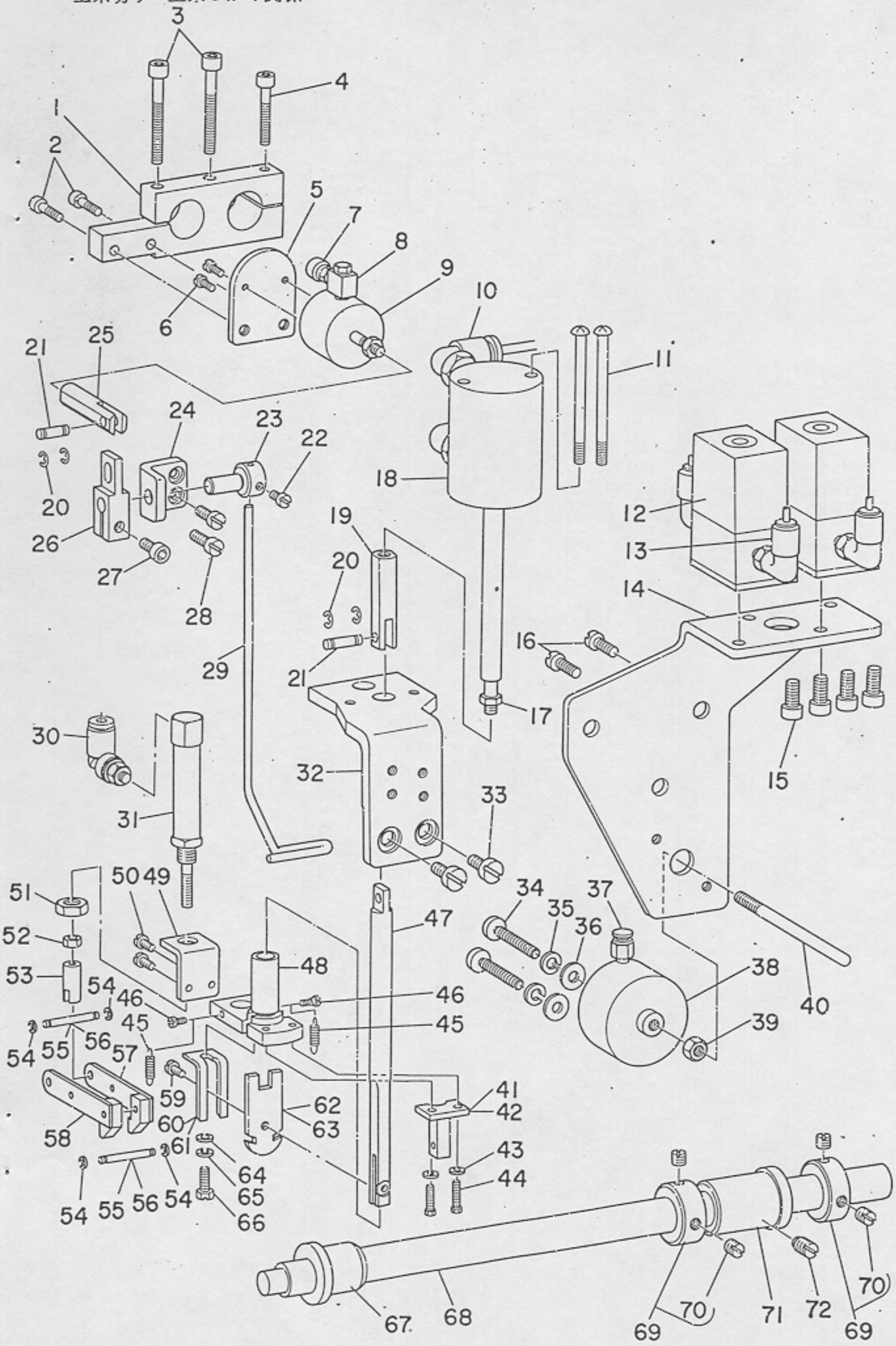

Ref. No.	Note 注記	Part No. 品番	Description	E. C. 変更年月	品名	Amt. Req. 数量
1		G5601-117-000	CYLINDER BASE		キリカエ シリンダダイ	1
2		SM-6041502-TP	SCREW M4X0.7 L=15		デンシヘン トメネジ	2
3		SM-6053502-SP	SCREW M5X0.8 L=35		ロウカクアナボルト M5X0.8 L=35	2
4		SM-6042502-TP	SCREW M4X0.7 L=25		ロウカクアナボルト M4X0.7 L=25	1
5		G5612-117-000	WIPER CYLINDER BASE		ワイパ シリンダダイ	1
6		SS-6080710-SP	SCREW 1/8-44 L= 6.5		ヒラネジ 1/8-44 L=6.5	2
7		PJ-0320525-01	HOSE NIPPLE		ホースニップル	1
8		G5680-116-000	UNIVERSAL ELBOW		ユニバーサルエルボ	1
9		PA-1200501-A0	AIR CYLINDER		エアシリンダ	1
10		PJ-3040451-01	ELBOW UNION 4XPT1/8		エルボユニオン 4XPT1/8	1
11		SM-4055501-SC	SCREW M5X0.8 L=55		ナベコネジ M5X0.8 L=55	2
12		PV-1351010-A0	SOLENOID VALVE		デンジ キリカエベン	2
13		PJ-3040451-01	ELBOW UNION 4XPT1/8		エルボユニオン 4XPT1/8	4
14		G5602-117-000	SOLENOID VALVE BASE		デンジベン トリツケダイ	1
15		SM-6051002-TP	SCREW M5 L=10		ロウカクアナボルト M5X0.8 L=10	4
16		SS-7151330-SP	SCREW 15/64-28 L=13.0		マルヒラネジ 15/64-28 L=13	2
17		NM-6050000-SB	NUT M5		ロウカクナット M5X0.8 1シ2	1
18		PA-2003001-A0	AIR CYLINDER		エアシリンダ	1
19		G5655-116-000	CYLINDER JOINT		シタメスシリンダ ジョイント	1
20		B3035-450-000	SNAP RING		ウワオクリ リンクピン トメワ	4
21		B3034-450-000	LINK PIN		ウワオクリ リンクピン	2
22		SS-6110710-TP	SCREW 11/64-40 L= 6.5		ヒラネジ 11/64-40 L=6.5	1
23		G5608-117-000	WIPER SHAFT A		ワイパシク A	1
24		G5607-117-000	WIPER BASE		ワイパトダイ	1
25		G5611-117-000	WIPER SHAFT B		ワイパシク B	1
26		G5610-117-000	WIPER SHAFT ARM		ワイパシクウデ	1
27		SM-6051202-TP	SCREW M5X0.8 L=12		ロウカクアナボルト M5X0.8 L=12	1
28		SS-6111040-SP	SCREW 11/64-40 L= 9.5		ヒラネジ 11/64-40 L=9.5	2
29		G5609-117-000	WIPER		ワイパ	1
30		PJ-3040405-01	ELBOW UNION 4XM5		エルボユニオン 4XM5	1
31		G5625-116-000	NEEDLE THREAD RELEASING CYL.		ウワイト カイホーシリンダ	1
32		G5606-117-000	CYLINDER BASE		ウワメス シリンダトダイ	1
33		SS-7151210-SP	SCREW 15/64-28 L=12		マルヒラネジ 15/64-28 L=12	2
34		SM-4053001-SE	SCREW M5 L=30		ナベコネジ M5X0.8 L=30	2
35		WS-0510002-KN	SPRING WASHER 5.1X8.5X1.3		バネザガネ 5.1X9.2X1.3	2
36		WP-0612066-SP	WASHER 6.1X11X2		ヒラザガネ 6.1X11X2	2
37		PJ-3010451-01	HALF UNION		ハーフユニオン	1
38		PA-2000501-00	AIR CYLINDER		エアシリンダ	1
39		NM-6050003-SC	NUT M5X0.8		ロウカクナット M5X0.8 3シ2	1
40		G5613-117-000	TENSION RELEASE PIN		イトユルメ チヨウセツシク	1
41	◇01	G5628-116-000	THREAD NIPPER BRACKET		ウワイトツカミ シシダイ	1
42	◇02	G5628-116-A00	THREAD NIPPER BRACKET A		イトツカミシシダイ A	1
43		WP-0371036-SD	WASHER 3.7X6X1		ヒラザガネ 3.7X6X1	2
44		SS-9091010-SP	SCREW 9/64-40 L=10		ロウカクボルト 9/64-40 L=10	2
45		G5634-116-000	NEEDLE THREAD NIPPER SPRING		イトツカミバネ	2
46		SD-0260271-SP	HINGE SCREW D= 2.60 H= 2.7		ダンネジ D=2.6 H=2.7	2
47		G1501-117-000	KNIFE BAR		ウワメスボー	1
48		G1510-116-000	KNIFE BAR BEARING		ウワイト メスボー シクウケ	1
49		G5624-116-000	CYLINDER INSTALLING PLATE		シリンダ トリツケダイ	1
50		SS-6080710-SP	SCREW 1/8-44 L= 6.5		ヒラネジ 1/8-44 L=6.5	2
51		NM-6500315-MZ	NUT M8X1		ロウカクナット M8X1 H=3.2 3シ2	1
52		NM-6040000-SB	NUT M4X0.7		ロウカクナット M4X0.7 1シ1	1
53		G5626-116-000	NEEDLE THREAD RELEASE JOINT		ウワイトウカシ ジョイント	1
54		RE-0250000-K0	SNAP RING 2.5		Eカタトメワ 2.5	4
55	◇01	G5633-116-000	NEEDLE THREAD NIPPER PIVOT		ウワイトツカミ シテンシク	2
56	◇02	G5633-116-A00	NEEDLE THREAD NIPPER PIVOT A		ウワイトツカミ シシシク A	2
57		G5631-116-0A0	NEEDLE THREAD NIPPER RIGHT ASM		ウワイトツカミ ミギ クミ	1
58		G5632-116-0A0	NEEDLE THREAD NIPPER LEFT ASM.		ウワイトツカミ ヒダリ クミ	1
59		SS-6090650-SP	SCREW 9/64-40 L=6		ヒラネジ 9/64-40 L=6	1
60	◇01	G5630-116-000	NEEDLE THREAD COUNTER KNIFE		ウワイトコテイメス	1
61	◇02	G5630-116-A00	NEEDLE THREAD COUNTER KNIFE A		ウワイト コテイメス A	1
62	◇01	G5629-116-000	NEEDLE THREAD KNIFE		ウワイトメス	1
63	◇02	G5629-116-A00	NEEDLE THREAD KNIFE A		ウワイトメス A	1
64		WP-0450000-SD	WASHER 4.5X8X0.5		ヒラザガネ 4.5X8X0.5	1
65		WS-0451040-KP	SPRING WASHER		バネザガネ 4.5X8.5X1	1
66		SS-9091010-SP	SCREW 9/64-40 L=10		ロウカクボルト 9/64-40 L=10	1
67		B1606-512-000	ROCK SHAFT BUSHING, FRONT		スイヘイシク マエメタル	1
68		G1601-116-000	FEED ROCK SHAFT		スイヘイオクリシク	1
69		CS-170101A-SZ	THRUST COLLAR ASM. D=17 W=10		スラストウケ D=17 W=10 クミ	2
70		SS-8150750-SP	SCREW 15/64-28 L=7		トメネジ 15/64-28 L=7	(4)
71		B1608-512-000	ROCK SHAFT BUSHING, REAR		スイヘイシク ウシロメタル	1
72		SS-8681130-SP	SCREW 9/32-28 L=11		トメネジ 9/32-28 L=11	1

Note (注記) ◇01 ..... For 9.5, 10, 12 mm　　9.5、10、12mm用
◇02 ..... For 14 ~ 20 mm　　14～20mm用

5. HOOK & HOOK DRIVING SHAFT COMPONENTS

かま・下軸関係

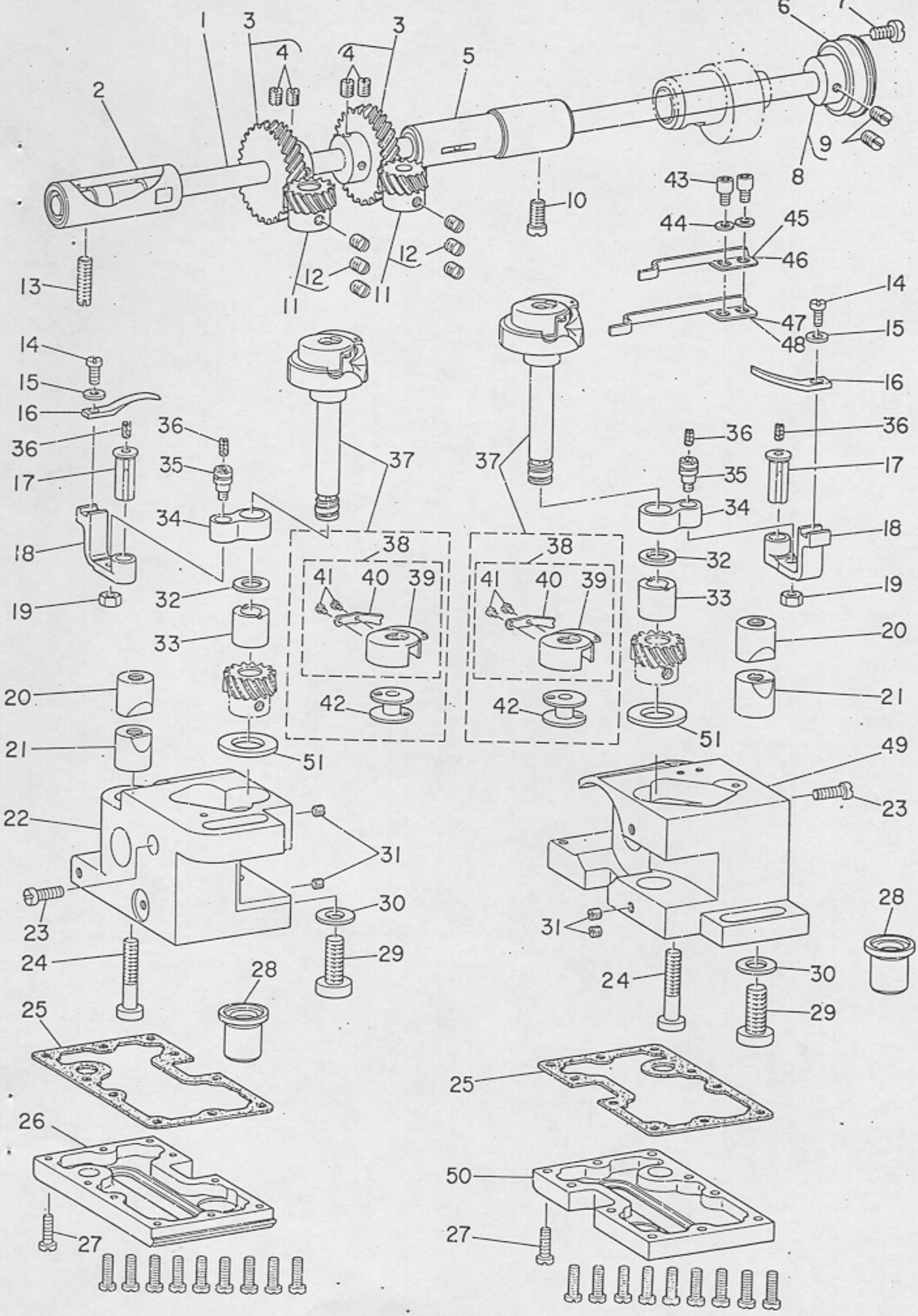

Ref. No.	Note 注記	Part No. 品番	Description	E. C. 変更年月	品名	Amt. Req. 数量
1		B1801-515-000-A	HOOK DRIVING SHAFT		ｼﾀｼﾞｸ	1
2		B1802-512-0A8	BUSHING ASM., FRONT		ｼﾀｼﾞｸ ﾏｴﾒﾀﾙ ｸﾐ	1
3		B1816-512-0A0	HOOK DRIVING SHAFT GEAR ASM.		ｼﾀｼﾞｸ ﾈｼﾞﾊｸﾞﾙﾏ ｸﾐ	2
4		SS-8660810-TP	SCREW 1/4-40 L=8		ﾄﾒﾈｼﾞ 1/4-40 L=8	(4)
5		101-12357	BUSHING ASM. INTERMEDIATE		ｼﾀｼﾞｸﾅｶﾒﾀﾙ ｸﾐ	1
6		B1813-512-C00	HOOK DRIVING SHAFT BEARING		ｼﾀｼﾞｸ ﾍﾞｱﾘﾝｸﾞ	1
7		SS-6111140-SP	SCREW 11/64-40 L=11		ﾋﾗﾈｼﾞ 11/64-40 L=11	1
8		B1804-512-0A0	THRUST COLLAR ASM.		ｼﾀｼﾞｸ ｽﾗｽﾄｳｹ ｸﾐ	1
9		SS-8150710-SP	SCREW 15/64-28 L=7		ﾄﾒﾈｼﾞ 15/64-28 L=7	(2)
10		SS-7151120-SP	SCREW 15/64-28 L=11		ﾏﾙﾋﾗﾈｼﾞ 15/64-28 L=11	1
11	◇01	101-12050	HOOK SHAFT GEAR ASM., A		ｶﾏｼﾞｸ ﾈｼﾞﾊｸﾞﾙﾏ ｸﾐ	2
12		SS-8660530-TP	SCREW 1/4-40 L= 4.5		ﾄﾒﾈｼﾞ 1/4-40 L=4.5	(6)
13		SS-8152030-SP	SCREW 15/64-28 L=20		ﾄﾒﾈｼﾞ 15/64-28 L=20	1
14		SS-6090810-SP	SCREW 9/64-40 L= 7.5		ﾋﾗﾈｼﾞ 9/64-40 L=7.5	2
15		WP-0371016-SD	WASHER 3.7X8X1		ﾋﾗｻﾞｶﾞﾈ 3.7X8X1	2
16		B1824-051-000	BOBBIN CASE OPENING LEVER		ﾅｶｶﾞﾏ ｱﾝﾅｲ	2
17		B1823-051-000	BOBBIN CASE OPENING LEVER CRANK PIN		ﾅｶｶﾞﾏ ｱﾝﾅｲｳﾃﾞ ｼﾞｸ	2
18		B1822-051-000	BOBBIN CASE OPENING LEVER CRANK		ﾅｶｶﾞﾏ ｱﾝﾅｲｳﾃﾞ	2
19		NS-6110430-SP	NUT 11/64-40		ﾛｯｶｸﾅｯﾄ 11/64-40	2
20		101-09908	SADDLE INSTALLING BLOCK, UPPER		ｶﾏｼﾞｸﾀﾞｲﾄﾒ ｳｴ	2
21		101-12407	SADDLE INSTALLING BLOCK, LOWER		ｶﾏｼﾞｸﾀﾞｲﾄﾒ ｼﾀ	2
22		G1810-119-000	HOOK SHAFT SADDLE, LEFT		ｶﾏｼﾞｸﾀﾞｲ ﾋﾀﾞﾘ	1
23		SS-6111610-SP	SCREW 11/64-40 L=16		ﾋﾗﾈｼﾞ 11/64-40 L=16	2
24		SS-6153012-TP	SCREW 15/64-28		ﾛｯｶｸｱﾅﾎﾞﾙﾄ 15/64-28	2
25		G1861-119-000	GASKET		ｶﾏｼﾞｸﾀﾞｲ ﾊﾟｯｷﾝ	2
26		G1860-119-AA0	HOOK SADDLE COVER ASM., LEFT		ｶﾏｼﾞｸﾀﾞｲﾌﾀ ﾋﾀﾞﾘ ｸﾐ	1
27		SS-6091210-SP	SCREW 9/64-40 L=12.0		ﾋﾗﾈｼﾞ 9/64-40 L=12	20
28		G1815-119-000	HOOK SHAFT LOWER BUSHING		ｶﾏｼﾞｸｼﾀﾒﾀﾙ	2
29		SM-6082002-SP	SCREW M8 L=20		ﾛｯｶｸｱﾅﾎﾞﾙﾄ M8 L=20	2
30		WP-0850002-SP	WASHER 8.5X18X1.6		ﾋﾗｻﾞｶﾞﾈ 8.5X18X1.6	2
31		SS-8110410-TP	SCREW 11/64-40 L= 3.5		ﾄﾒﾈｼﾞ 11/64-40 L=3.5	4
32	◇01	101-11102	THRUST WASHER 1.3		ｶﾏｼﾞｸｳﾜﾒﾀﾙ ｽﾗｽﾄｲﾀ 1.3	2
33		G1816-119-000	HOOK SHAFT UPPER BUSHING		ｶﾏｼﾞｸｳﾜﾒﾀﾙ	2
34		B1820-051-000	BOBBIN CASE OPENING LEVER LINK		ﾅｶｶﾞﾏ ｱﾝﾅｲ ﾘﾝｸ	2
35		B1821-051-000	CRANK SCREW STUD		ﾅｶｶﾞﾏ ｱﾝﾅｲ ｸﾗﾝｸﾋﾟﾝ	2
36		CQ-2020000-C0	OIL WICK		ｴｼﾝ	0.1
37		G1830-119-0B0	VERTICAL-AXIS HOOK ASM.		ｽｲﾍｲｶﾏ ｸﾐ	2
38		G1831-116-0A0	BOBBIN CASE ASM.		ﾎﾞﾋﾞﾝｹｰｽ ｸﾐ	(2)
39		G1831-116-00B	TENSION SPRING		ﾁｮｰｼﾊﾞﾈ	(2)
40		040-00001380	TENSION SPRING SET SCREW		ﾌﾅﾊﾞﾈ ﾄﾒﾈｼﾞ	(2)
41		040-00000591	TENSION SPRING ADJUSTING SCREW		ﾌﾅﾊﾞﾈ ﾁｮｰｾﾂﾈｼﾞ	(2)
42		B9117-C51-C00	BOBBIN		ﾎﾞﾋﾞﾝ	(2)
43		SM-6040802-SP	SCREW M4X0.7 L=8		ﾛｯｶｸｱﾅﾎﾞﾙﾄ M4X0.7 L=8	2
44		WP-0450000-SD	WASHER 4.5X8X0.5		ﾋﾗｻﾞｶﾞﾈ 4.5X8X0.5	2
45	◇02	G5660-116-00B	NIPPER SPRING B		ｲﾄﾂｶﾐｵｼﾊﾞﾈ B	1
46	◇03	G5660-116-ACB	NIPPER SPRING B		ｲﾄﾂｶﾐ ｵｼﾊﾞﾈ B	1
47	◇02	G5660-116-CCA	NIPPER SPRING A		ｲﾄﾂｶﾐｵｼﾊﾞﾈ A	1
48	◇03	G5660-116-ACA	NIPPER SPRING A		ｲﾄﾂｶﾐ ｵｼﾊﾞﾈ A	1
49		G1811-119-000	HOOK SHAFT SADDLE, RIGHT		ｶﾏｼﾞｸﾀﾞｲ ﾐｷﾞ	1
50		G1860-119-BA0	HOOK SADDLE COVER ASM., RIGHT		ｶﾏｼﾞｸﾀﾞｲﾌﾀ ﾐｷﾞ ｸﾐ	1
51		B1818-C51-C00	THRUST WASHER		ﾈｼﾞﾊｸﾞﾙﾏ ｽﾗｽﾄｲﾀ C	2

Note (注記) ◇01 ..... Selective part 選択部品
◇02 ..... For 9.5, 10, 12 mm 9.5、10、12㎜用
◇03 ..... For 14 ~ 20 mm 14～20㎜用

6. FEED & CENTER KNIFE CYLINDER COMPONENTS.

送り・中メスシリンダ関係

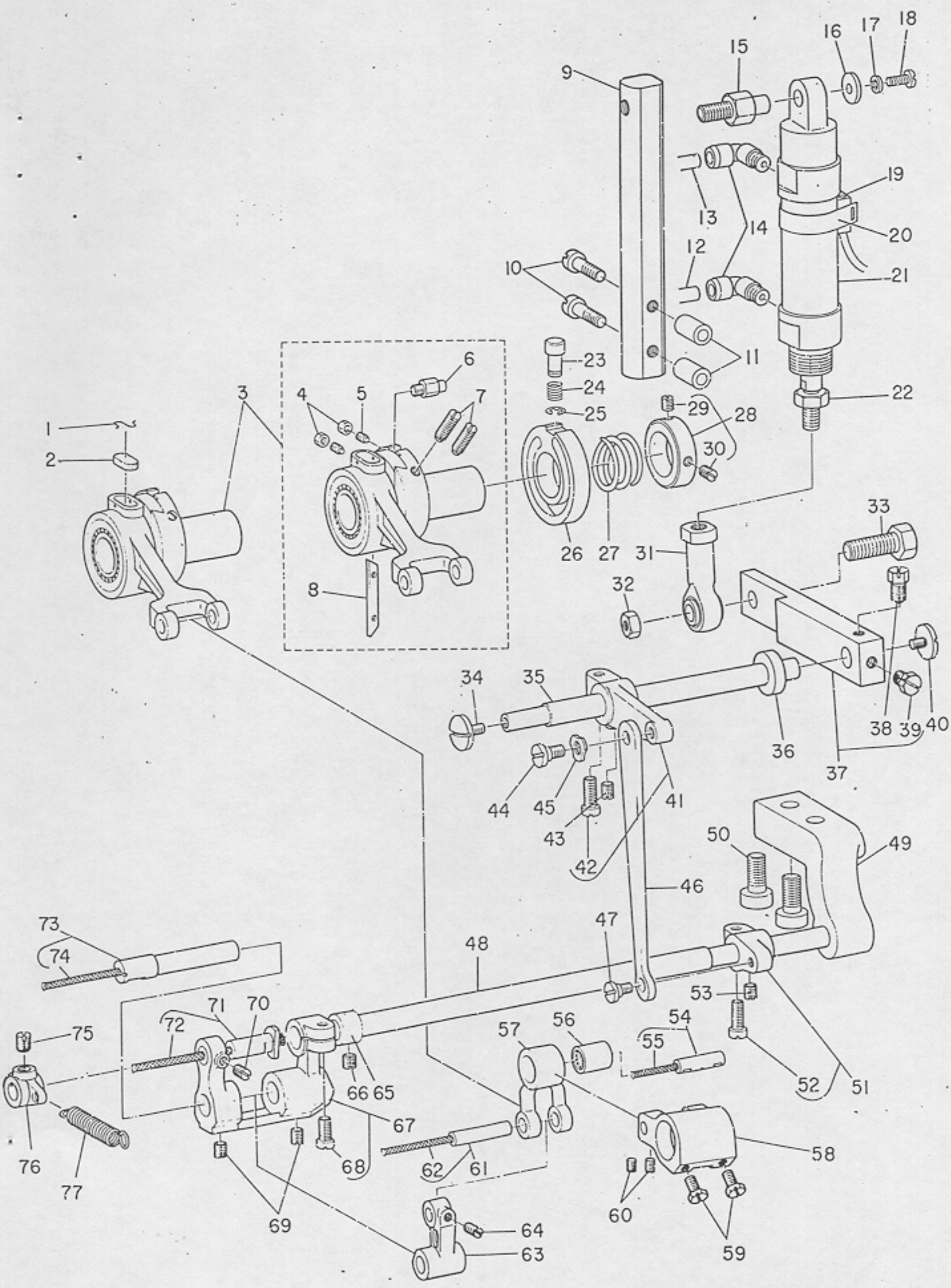

Ref. No.	Note 注記	Part No. 品番	Description	E. C. 変更年月	品名	Amt. Req. 数量
1		B1213-012-000	FELT RETAINER		ﾌｪﾙﾄ ｵｻｴ	1
2		B1702-012-000	OIL FELT		ﾌｪﾙﾄ	1
3		G1614-116-0A0	CRANK CONNECTING ROD ASM.		ｵｸﾘﾛｯﾄﾞ ｸﾐ	1
4		NS-6080210-SP	NUT 1/8-44		ﾛｯｶｸﾅｯﾄ 1/8-44	(2)
5		SS-8081210-TH	SCREW 1/8-44 L=11.5		ﾄﾒﾈｼﾞ 1/8-44 L=11.5	(2)
6		B1623-563-000	FEED ADJUSTING SCREW		ｵｸﾘﾁｮｰｾﾂ ﾘｰﾄﾞｶﾈﾋﾟﾝ	(1)
7		SS-8151550-SP	SCREW 15/64-28 L=15		ﾄﾒﾈｼﾞ 15/64-28 L=15	(2)
8		B1622-057-000	FRICTION PLATE		ｵｸﾘ ﾁｮｰｾﾂ ｶﾐｿﾘ	(1)
9		G5601-116-000	CENTER KNIFE CYLINDER BASE		ﾅｶﾒｽｼﾘﾝﾀﾞｰ ﾄﾞﾀﾞｲ	1
10		SS-7152510-SP	SCREW 15/64-28 L=24.5		ﾏﾙﾋﾗﾈｼﾞ 15/64-28 L=24.5	2
11		GAC-0100200C	COLLAR		ｿﾚﾉｲﾄﾞ ﾄﾘﾂｹﾀﾞｲ ｻﾞｶﾞﾈ	2
12		G5465-116-000	TUBE HOSE, YELLOW		ﾁｭｰﾌﾞﾎｰｽ ｷ	0.6
13		G5460-116-0C0	TUBE HOSE, RED		ﾁｭｰﾌﾞﾎｰｽ ｱｶ	0.6
14		PJ-3040651-01	ELBOW UNION 6XPT1/8		ｴﾙﾎﾞｳﾆｵﾝ 6XPT1/8	2
15		G5602-116-C00	CENTER KNIFE CYLINDER SHAFT		ﾅｶﾒｽｼﾘﾝﾀﾞｰ ｼﾞｸ	1
16		WP-0482086-SD	WASHER 4.8X11.5X2.0		ﾋﾗｻﾞｶﾞﾈ 4.8X11.5X2	1
17		WS-0521010-KP	SPRING WASHER 5.2X8.5X1.0		ﾊﾞﾈｻﾞｶﾞﾈ 5.2X8.2X1	1
18		SS-6121050-SP	SCREW 3/16-28 L= 9.5		ﾋﾗﾈｼﾞ 3/16-28 L=9.5	1
19		G6702-119-CA0	CONTACTLESS SWITCH ASM.		ｷﾝｾﾂｽｲｯﾁ ｸﾐ	1
20		G5326-119-000	SWITCH HOLDER A		ｷﾝｾﾂｽｲｯﾁ ﾄﾘﾂｹﾎﾙﾀﾞｰ A	1
21		PA-2002502-A0	AIR CYLINDER		ﾅｶﾒｽｼﾘﾝﾀﾞｰ	1
22		NM-6080000-SB	NUT		ﾛｯｶｸﾅｯﾄ M8 1ｼｭ	(1)
23		B1636-055-000	FEED ECCENTRIC ADJUSTING KNOB		ｵｼﾎﾞﾀﾝ	1
24		B1639-051-000	SPRING		ｵｼﾎﾞﾀﾝ ﾊﾞﾈ	1
25		RE-0500000-K0	SNAP RING 5		Eｶﾞﾀﾄﾒﾜ 5	1
26		B1626-562-0C0	FEED ECCENTRIC GUIDE		ｵｸﾘ ﾁｮｰｾﾂ ｱﾝﾅｲｶﾞﾈ	1
27		B1624-055-000	FEED ECCENTRIC BODY SPRING		ｵｸﾘ ﾁｮｰｾﾂﾊﾞﾈ	1
28		B1625-057-CA0	RETAINING COLLAR ASM.		ｵｸﾘﾁｮｰｾﾂﾀﾞｲ ﾊﾞﾈｳｹ ｸﾐ	1
29		SS-8110750-SP	SCREW 11/64-40 L= 6.5		ﾄﾒﾈｼﾞ 11/64-40 L=6.5	(1)
30		SS-8110510-SP	SCREW 11/64-40 L=5		ﾄﾒﾈｼﾞ 11/64-40 L=5	(1)
31		G5606-116-C00	CYLINDER ROD END		ﾅｶﾒｽｼﾘﾝﾀﾞｰ ﾛｯﾄｴﾝﾄﾞ	1
32		NS-6200520-SP	NUT 5/16-18		ﾛｯｶｸﾅｯﾄ 5/16-18	1
33		SS-9202443-CP	SCREW 5/16-18 L=24		ﾛｯｶｸﾎﾞﾙﾄ 5/16-18 L=24	1
34		SS-7620750-SP	SCREW 3/16-32 L= 6.5		ﾏﾙﾋﾗﾈｼﾞ 3/16-32 L=6.5	1
35		B1660-515-000	LEVER SHAFT		ｵｸﾘ ﾚﾊﾞｰｼﾞｸ	1
36		B1662-562-0C0	COLLAR		ｵｸﾘﾚﾊﾞｰ ｻﾞｶﾞﾈ	1
37		G1624-116-CA0	LEVER ASM.		ﾅｶﾒｽ ｼﾚｰﾚﾊﾞｰ ｸﾐ	1
38		SS-9660910-SP	SCREW 1/4-40 L=9.4		ﾛｯｶｸﾎﾞﾙﾄ 1/4-40 L=9.4	(1)
39		SS-9660940-SP	SCREW 1/4-40 L=8.5		ﾛｯｶｸﾎﾞﾙﾄ 1/4-40 L=8.5	(1)
40		SS-7620750-SP	SCREW 3/16-32 L= 6.5		ﾏﾙﾋﾗﾈｼﾞ 3/16-32 L=6.5	1
41		B1629-555-CA0	CONTROL LEVER CRANK ASM.		ｵｸﾘ ﾁｮｰｾﾂｳﾃﾞ ｸﾐ	1
42		SS-6121210-SP	SCREW 3/16-28 L=12		ﾋﾗﾈｼﾞ 3/16-28 L=9	(1)
43		SS-8150710-SP	SCREW 15/64-28 L=7		ﾄﾒﾈｼﾞ 15/64-28 L=7	1
44		SD-0600321-SP	HINGE SCREW D= 6 H= 3.2		ﾀﾞﾝﾈｼﾞ D=6 H=3.2	1
45		WZ-0641510-KP	WAVED WASHER 6.4X11X0.3		ﾅﾐｶﾞﾀｻﾞｶﾞﾈ 6.4X11X0.3	1
46		B1657-515-C00	FEED REGULATING ROD		ｵｸﾘ ﾁｮｰｾﾂ ﾛｯﾄﾞ	1
47		SD-060C271-SP	HINGE SCREW D= 6 H= 2.7		ﾀﾞﾝﾈｼﾞ D=6 H=2.7	1
48		B1641-515-000	FEED REGULATING SHAFT		ｵｸﾘ ﾁｮｰｾﾂｳﾃﾞｼﾞｸ	1
49		B1655-515-000	FEED CHANGING BASE		ｵｸﾘ ﾍﾝｶﾝ ｼﾞｸﾀﾞｲ	1
50		SM-6081542-CP	SCREW M8X1.25 L=15		ﾛｯｶｸｱﾅﾎﾞﾙﾄ M8 L=15	2
51		B1654-515-0A0	FEED CHANGING ARM ASM.		ｵｸﾘ ﾍﾝｶﾝｳﾃﾞ ｸﾐ	1
52		SS-6121210-SP	SCREW 3/16-28 L=12		ﾋﾗﾈｼﾞ 3/16-28 L=9	(1)
53		SS-8150710-SP	SCREW 15/64-28 L=7		ﾄﾒﾈｼﾞ 15/64-28 L=7	1
54		B1648-562-0A0	CONNECTING PIN ASM.		ｽｲﾍｲ ｵｸﾘｳﾃﾞｼﾞｸ ｸﾐ	1
55		CQ-2020000-C0	OIL WICK		ｴﾝｼﾝ	(0.1)
56		B1664-562-0C0	NEEDLE BEARING		ﾌﾀﾏﾀﾘﾝｸ ﾆｰﾄﾞﾙ ｼﾞｸｳｹ	1
57		B1647-562-0C0	FEED REGULATING FORK LINK		ｵｸﾘ ﾁｮｰｾﾂ ﾌﾀﾏﾀﾘﾝｸ	1
58		G1616-116-000	FEED ROCK SHAFT CRANK		ｽｲﾍｲｵｸﾘｳﾃﾞ	1
59		SS-9120910-TP	SCREW 3/16-28 L=9		ﾛｯｶｸﾎﾞﾙﾄ 3/16-28 L=9	2
60		SS-8110520-TP	SCREW 11/64-4C L= 4.5		ﾄﾒﾈｼﾞ 11/64-4C L=4.5	2
61		B1646-562-CA0	FEED REGULATING LINK PIN ASM.		ｵｸﾘ ﾁｮｾﾂﾘﾝｸ ｼﾞｸ ｸﾐ	1
62		CQ-2020000-00	OIL WICK		ｴﾝｼﾝ	(0.1)
63		G1645-116-000	FEED REGULATING LINK		ｵｸﾘﾁｮｰｾﾂﾘﾝｸ	1
64		SS-8110750-SP	SCREW 11/64-40 L= 6.5		ﾄﾒﾈｼﾞ 11/64-40 L=6.5	1
65		B1643-562-000	BUSHING, FOR ARM SHAFT		ｵｸﾘ ﾁｮｰｾﾂｳﾃﾞ ｼﾞｸ ﾒﾀﾙ	1
66		SS-8150710-SP	SCREW 15/64-28 L=7		ﾄﾒﾈｼﾞ 15/64-28 L=7	1
67		B1640-515-CA0	FEED REGULATING ARM ASM.		ｵｸﾘ ﾁｮｰｾﾂｳﾃﾞ ｸﾐ	1
68		SS-7151210-SP	SCREW 15/64-28 L=12		ﾏﾙﾋﾗﾈｼﾞ 15/64-28 L=12	(1)
69		SS-8110750-SP	SCREW 11/64-4C L= 6.5		ﾄﾒﾈｼﾞ 11/64-4C L=6.5	2
70		SS-8110520-TP	SCREW 11/64-4C L= 4.5		ﾄﾒﾈｼﾞ 11/64-4C L=4.5	1
71		B1642-515-CA0	FEED REGULATING ARM PIN ASM.		ｵｸﾘ ﾁｮｰｾﾂｳﾃﾞ ﾋﾟﾝ ｸﾐ	1
72		CQ-2020000-00	OIL WICK		ｴﾝｼﾝ	(0.3)
73		B1644-515-CA0	FEED REGULATING PIN ASM.		ｵｸﾘ ﾁｮｰｾﾂﾋﾟﾝ ｸﾐ	1
74		CQ-3030000-00	OIL WICK		ｴﾝｼﾝ	(0.2)
75		SS-8150710-SP	SCREW 15/64-28 L=7		ﾄﾒﾈｼﾞ 15/64-28 L=7	1
76		B1647-122-C00	SUSPENSION BRACKET A		ﾋｹﾞﾊﾟﾘ ﾊﾞﾈｶｹ A	1
77		B2007-232-0C0	TENSION SPRING		ﾋｹﾞﾊﾟﾘﾊﾞﾈ	1

7. CENTER KNIFE & BOBBIN THREAD TRIMMER COMPONENTS
中メス・下糸切り関係

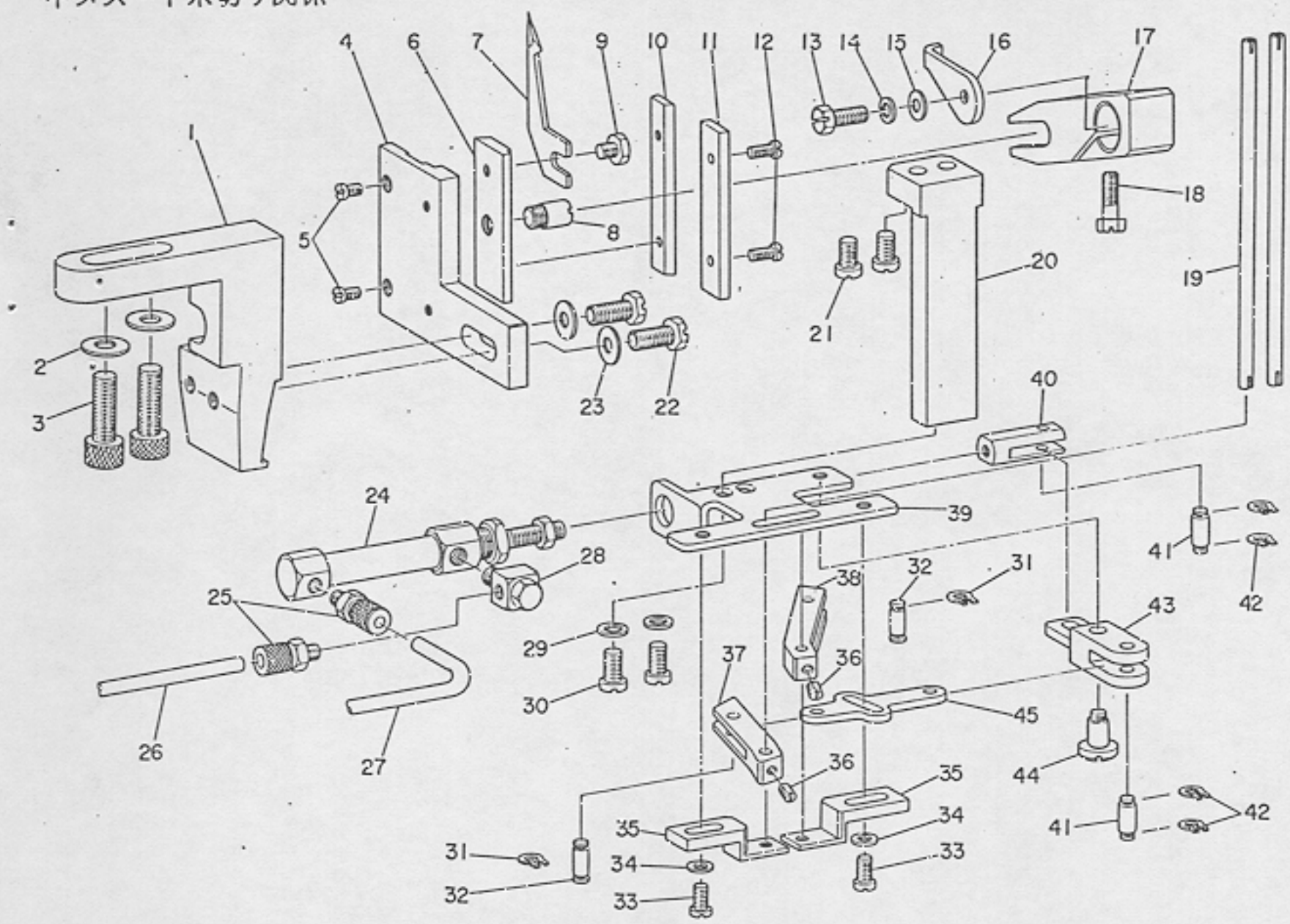

Ref. No.	Note 注記	Part No. 品番	Description	E. C. 変更年月	品名	Amt. Req. 数量
1	*	G5705-119-000	CENTER KNIFE BASE	A.01/85	ﾅｶﾒｽﾀﾞｲ	1
2	*	WP-0820816-SD	WASHER 8.2X16X0.8	A.01/85	ﾋﾗｻﾞｶﾞﾈ 8.2X16X0.8	2
3	*	SM-6082002-TP	SCREW M8 L=20	A.01/85	ﾛｯｶｸｱﾅﾎﾞﾙﾄ	2
4	*	G5644-116-000	CENTER KNIFE HOLDER GUIDE	A.01/85	ﾅｶﾒｽﾎﾙﾀﾞｰ ｶﾞｲﾄﾞ	1
5	*	SS-6090440-SP	SCREW 9/64-40 L= 4.0	A.01/85	ﾋﾗﾈｼﾞ 9/64-40 L=4	2
6	*	G5647-116-000	CENTER KNIFE HOLDER	A.01/85	ﾒｽﾎﾙﾀﾞｰ	1
7	*	G5649-116-A0A	CENTER KNIFE	A.01/85	ｽﾉｷﾘﾒｽ	1
8	*	G5648-116-000	CENTER KNIFE HOLDER GUIDE PIN	A.01/85	ﾒｽﾎﾙﾀﾞｰ ｶﾞｲﾄﾞｼﾞｸ	1
9	*	SS-9110513-TP	SCREW 11/64-40 L=5	A.01/85	ﾛｯｶｸﾎﾞﾙﾄ 11/64-40 L=4.5	1
10	*	G5646-116-000	CENTER KNIFE PRESSER	A.01/85	ﾒｽﾎﾙﾀﾞｰ ｵｻｴｲﾀ	1
11	*	G5645-116-000	CENTER KNIFE PRESSER PLATE	A.01/85	ﾅｶﾒｽﾎﾙﾀﾞｰ ｵｻｴｲﾀ	1
12	*	SS-7090910-SP	SCREW 9/64-40 L= 8.5	A.01/85	ﾏﾙﾋﾗﾈｼﾞ 9/64-40 L=8.5	2
13	*	SS-9121210-TP	SCREW 3/16-28 L=12	A.01/85	ﾛｯｶｸﾎﾞﾙﾄ 3/16-28 L=13.5	1
14	*	WS-0521010-KP	SPRING WASHER 5.2X8.5X1.0	A.01/85	ﾊﾞﾈｻﾞｶﾞﾈ 5.2X8.2X1	1
15	*	WP-0510516-SD	WASHER 5.1X7.5X0.5	A.01/85	ﾋﾗｻﾞｶﾞﾈ 5.1X7.5X0.5	1
16	*	G5642-116-000	CENTER KNIFE POSITIONING PLATE	A.01/85	ﾅｶﾒｽ ｲﾁｷﾒｲﾀ	1
17	*	G5641-116-000	CENTER KNIFE LIFTING ARM	A.01/85	ﾅｶﾒｽ ｼｮｰｺｰｱｰﾑ	1
18	*	SS-9121410-TP	SCREW 3/16-28 L=14	A.01/85	ﾛｯｶｸﾎﾞﾙﾄ 3/16-28 L=14	1
19	*	G5659-116-000	BOBBIN THREAD NIPPER BAR	A.01/85	ｼﾀｲﾄﾂｶﾐﾎﾞｰ	2
20	*	G5701-119-000	KNIFE MOUNTING BASE	A.01/85	ｼﾀﾒｽﾄﾘﾂｹﾄﾞﾀﾞｲ	1
21	*	SS-7150940-SP	SCREW 15/64-28 L=9	A.01/85	ﾏﾙﾋﾗﾈｼﾞ 15/64-28 L=9	2
22	*	SS-9151420-TP	BOLT 15/64-28 L=14	A.01/85	ﾛｯｶｸﾎﾞﾙﾄ 15/64-28 L=14	2
23	*	WP-0650876-SD	WASHER 6.5X13X0.8	A.01/85	ﾋﾗｻﾞｶﾞﾈ 6.5X13X0.8	2
24	*	PA-1001502-A0	AIR CYLINDER ASM.	A.01/85	ﾁｮｳﾐﾆｼﾘﾝﾀﾞ	1
25	*	G5605-116-000	HOSE NIPPLE	A.01/85	ﾎｰｽﾆｯﾌﾟﾙ	2
26	*	BT-0600400-EB	TUBE HOSE, BLACK	A.01/85	ｳﾚﾀﾝﾎｰｽ ｸﾛ	0.8
27	*	BT-0600400-EC	TUBE HOSE, BLUE	A.01/85	ｳﾚﾀﾝﾎｰｽ ｱｵ	0.9
28	*	G5680-116-000	UNIVERSAL ELBOW	A.01/85	ﾕﾆﾊﾞｰｻﾙｴﾙﾎﾞ	1
29	*	WP-0621026-SP	WASHER 6.2X9.5X1	A.01/85	ﾋﾗｻﾞｶﾞﾈ 6.2X9.5X1	2
30	*	SS-7150940-SP	SCREW 15/64-28 L=9	A.01/85	ﾏﾙﾋﾗﾈｼﾞ 15/64-28 L=9	2
31	*	B3035-450-000	SNAP RING	A.01/85	ｳﾜｵｸﾘ ﾘﾝｸﾋﾟﾝ ﾄﾒﾜ	2
32	*	G5704-119-000	PIN	A.01/85	ｼﾀﾒｽﾋﾟﾝ	2
33	*	SS-7110710-SP	SCREW 11/64-40 L=7	A.01/85	ﾏﾙﾋﾗﾈｼﾞ 11/64-40 L=7	2
34	*	WP-0450000-SD	WASHER 4.5X8X0.5	A.01/85	ﾋﾗｻﾞｶﾞﾈ 4.5X8X0.5	2
35	*	G5703-119-000	KNIFE PRESSER BASE	A.01/85	ｼﾀﾒｽｵｻｴﾀﾞｲ	2
36	*	SS-8110410-TP	SCREW 11/64-40 L= 3.5	A.01/85	ﾄﾒﾈｼﾞ 11/64-40 L=3.5	2
37	*	G5710-119-000	KNIFE LINK ARM, LEFT	A.01/85	ｼﾀﾒｽｼﾞｸｳﾃﾞ ﾋﾀﾞﾘ	1
38	*	G5709-119-000	KNIFE LINK ARM, RIGHT	A.01/85	ｼﾀﾒｽｼﾞｸｳﾃﾞ ﾐｷﾞ	1
39	*	G5706-119-000	CYLINDER BASE	A.01/85	ｼﾀﾒｽﾄﾘﾂｹﾀﾞｲ	1
40	*	G5707-119-000	CYLINDER JOINT	A.01/85	ｼﾀﾒｽｼﾘﾝﾀﾞｼﾞｮｲﾝﾄ	1
41	*	B3034-450-000	LINK PIN	A.01/85	ｳﾜｵｸﾘ ﾘﾝｸﾋﾟﾝ	2
42	*	B3035-450-000	SNAP RING	A.01/85	ｳﾜｵｸﾘ ﾘﾝｸﾋﾟﾝ ﾄﾒﾜ	2
43	*	G5702-119-000	KNIFE SUPPORTING BASE	A.01/85	ｼﾀﾒｽｼｼﾞﾀﾞｲ	1
44	*	SD-0640902-TP	HINGE SCREW	A.01/85	ﾀﾞﾝﾈｼﾞ D=6.35 H=9	1
45	*	G5708-119-000	JOINT CONNECTING PLATE	A.01/85	ｼﾞｮｲﾝﾄﾚﾝｹﾂｲﾀ	1

8. BELT COVER & BOBBIN WINDER UNIT
ベルトカバー・糸巻装置

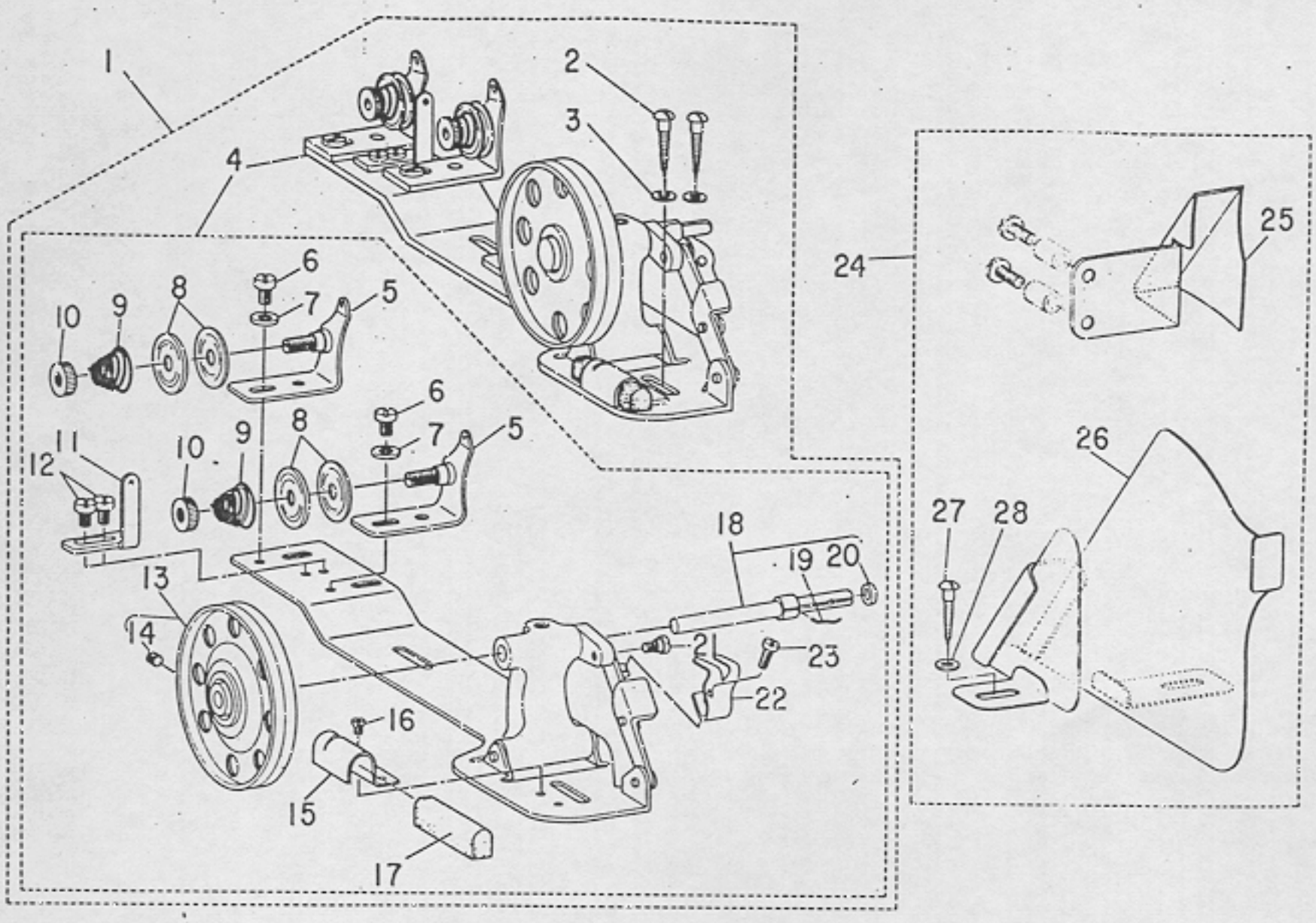

Ref. No.	Note 注記	Part No. 品番	Description	E. C. 変更年月	品名	Amt. Req. 数量
1		G3204-116-080	BOBBIN THREAD WINDER ASM.		ｲﾄﾏｷｿｰﾁ ｸﾐ	1
2		SK-3482500-SC	WOOD SCREW D=4.8 L=25		ﾏﾙﾓｸﾈｼﾞ D=4.8 L=25	(2)
3		WP-0501016-SC	WASHER 5X10.5X1		ﾋﾗｻﾞｶﾞﾈ 5.0X10.5X1	(2)
4		G3204-116-0A0	BOBBIN THREAD WINDER ASM.		ｲﾄﾏｷｿｰﾁ ｸﾐ	(1)
5		B3223-012-0A0	THREAD TENSION BRACKET ASM.		ｲﾄﾏｷ ｲﾄﾁｮｰﾝﾎﾞｰﾀﾞｲ ｸﾐ	(2)
6		SS-7110820-SN	SCREW 11/64-40 L=7.5		ﾏﾙﾋﾗﾈｼﾞ 11/64-40 L= 7.5	(2)
7		WP-0501016-SC	WASHER 5X10.5X1		ﾋﾗｻﾞｶﾞﾈ 5.0X10.5X1	(2)
8		B3126-012-000	TENSION DISC		ｲﾄﾁｮｰｼｸﾗ	(4)
9		B3129-012-B00	TENSION SPRING B		ｲﾄﾁｮｰｼ ﾊﾞﾈ B	(2)
10		B3125-012-000	THREAD TENSION STUD NUT		ｲﾄﾁｮｰｼ ﾅｯﾄ	(2)
11		G3213-116-000	THREAD GUIDE		ｲﾄﾏｷｲﾄｱﾝﾅｲ	(1)
12		SS-7110820-SN	SCREW 11/64-40 L=7.5		ﾏﾙﾋﾗﾈｼﾞ 11/64-40 L= 7.5	(2)
13		B3214-012-0A0	BOBBIN WINDER WHEEL ASM.		ｲﾄﾏｷﾀﾞﾙﾏ ｸﾐ	(1)
14		SS-8110510-SN	SCREW 11/64-40 L=5		ﾄﾒﾈｼﾞ 11/64-40 L=5	(1)
15		B3229-012-000	BRAKE CLAMP		ｾｲﾄﾞｰﾍﾞﾙﾄ ｵｻｴｸﾞ	(1)
16		SS-7110410-SN	SCREW 11/64-40 L=4		ﾏﾙﾋﾗﾈｼﾞ 11/64-40 L= 4	(1)
17		B3228-012-000	RUBBER BRAKE		ｾｲﾄﾞｰﾍﾞﾙﾄ	(1)
18		G3212-116-0A0	THREAD WINDER SHAFT ASM.		ｲﾄﾏｷｼﾞｸ ｸﾐ	(1)
19		B3210-771-000	BOBBIN SET SPRING		ﾎﾞﾋﾞﾝ ﾄﾒﾊﾞﾈ	(1)
20		B3224-771-000	COLLAR		ｲﾄﾏｷｼﾞｸ ｶﾗｰ	(1)
21		SD-0490261-SP	HINGE SCREW D=4.9 H=2.6		ﾀﾞﾝﾈｼﾞ D= 4.90 H= 2.6	(1)
22		G3217-116-000	BOBBIN PRESSER		ﾎﾞﾋﾞﾝｵｻｴ	(1)
23		SS-7081310-SN	SCREW 1/8-44 L=12.5		ﾏﾙﾋﾗﾈｼﾞ 1/8-44 L=12.5	(1)
24		G8230-116-0A0	BELT COVER ASM.		ﾍﾞﾙﾄｶﾊﾞｰ ｸﾐ	1
25		G8230-116-000	BELT COVER		ﾍﾞﾙﾄｶﾊﾞｰ	(1)
26		G8231-116-000	BELT COVER, UPPER		ﾍﾞﾙﾄｶﾊﾞｰ ｳｴ	(1)
27		SK-3482000-SC	WOOD SCREW D=4.8 L=20		ﾏﾙﾓｸﾈｼﾞ D=4.8 L=20	(1)
28		WP-0501016-SC	WASHER 5X10.5X1		ﾋﾗｻﾞｶﾞﾈ 5.0X10.5X1	(1)

9. LUBRICATION & OIL RESERVOIR COMPONENTS

給油・油溜関係

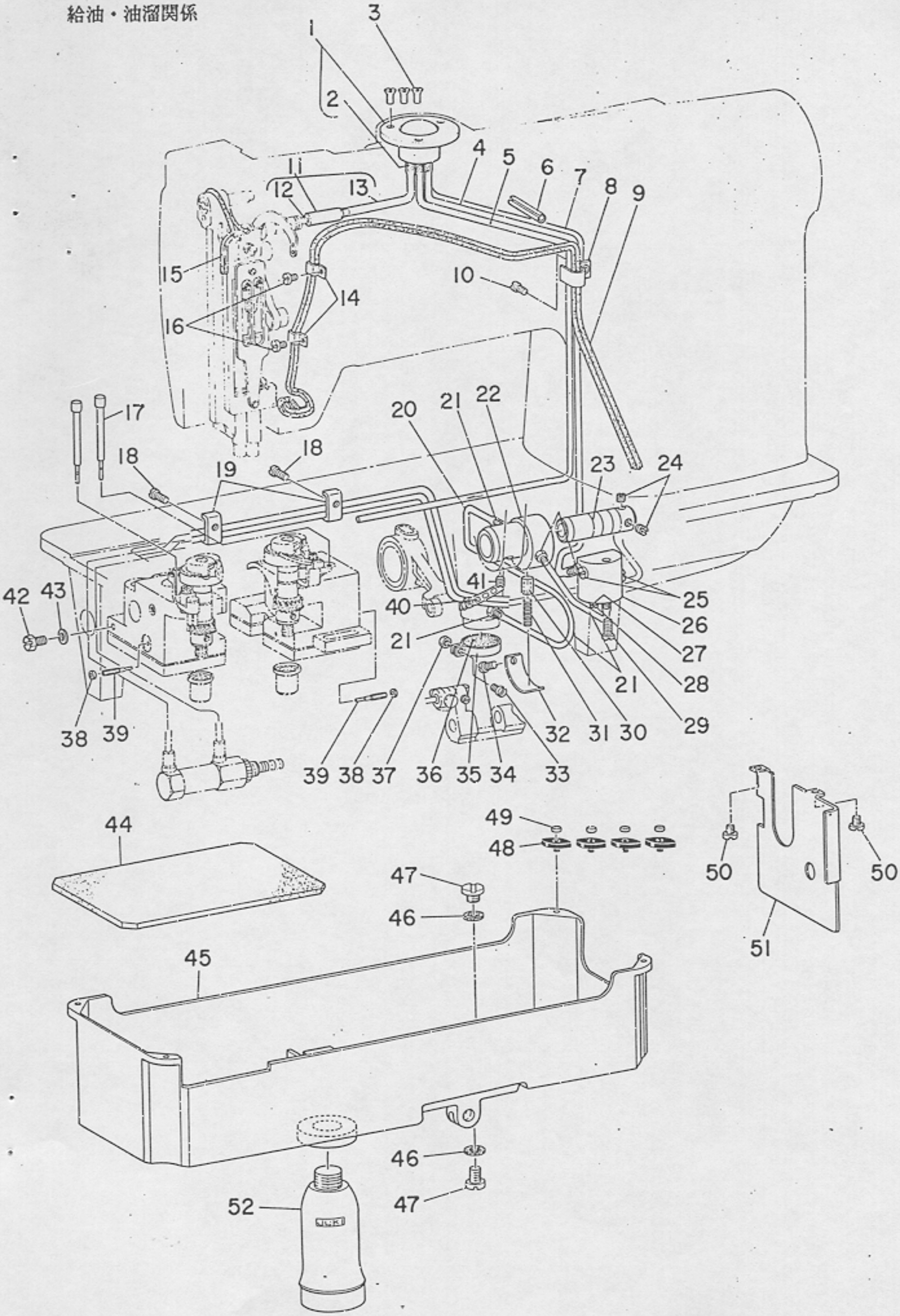

Ref. No.	Note 注記	Part No. 品番	Description	E. C. 変更年月	品名	Amt. Req. 数量
1		B3501-512-0A0-A	OIL TANK ASM.		ｵｲﾙﾀﾝｸ ｸﾐ	1
2		SQ-1110401-MZ	CONNECTING SCREW		ﾁｭｰﾌﾞﾚﾝｹﾂﾈｼﾞ	(3)
3		SS-2110930-SP	SCREW 11/64-40 L=8.7		ﾏﾙｻﾗﾈｼﾞ 11/64-40 L=8.75	3
4		BP-3000000-00	VINYL TUBE, WHITE D=3		ﾋﾞﾆｰﾙﾊﾟｲﾌﾟ	0.5
5		BP-3000000-00	VINYL TUBE, WHITE D=3		ﾋﾞﾆｰﾙﾊﾟｲﾌﾟ	0.5
6		PS-0400402-KH	SPRING PIN		ｽﾌﾟﾘﾝｸﾞﾋﾟﾝ	1
7		BP-3000000-00	VINYL TUBE, WHITE D=3		ﾋﾞﾆｰﾙﾊﾟｲﾌﾟ	0.3
8		B3505-512-000-A	VINYL TUBE HOLDER		ﾊﾟｲﾌﾟｵｻｴ	1
9		B3510-512-0A0	OIL RETURN WICK ASM.		ｶﾝﾘｭｰﾌｪﾙﾄ ｸﾐ	1
10		SS-6091210-TP	SCREW 9/64-40 L=12		ﾋﾗﾈｼﾞ 9/64-40 L=12	1
11		B1907-528-0B0	OIL SHAFT ASM.		ﾃﾝﾋﾟﾝｷｭｰﾕｼﾞｸ ｸﾐ	1
12		CQ-2020000-00	OIL WICK		ﾕｼﾝ	(0.2)
13		BP-3000000-00	VINYL TUBE, WHITE D=3		ﾋﾞﾆｰﾙﾊﾟｲﾌﾟ	(0.1)
14		B3508-512-000	OIL FELT HOLDER		ｶﾝﾘｭｰ ﾌｪﾙﾄ A ｵｻｴ	2
15		CQ-2020000-00	OIL WICK		ﾕｼﾝ	0.3
16		SS-7110710-SP	SCREW 11/64-40 L=7		ﾏﾙﾋﾗﾈｼﾞ 11/64-40 L=7	2
17		G1862-119-000	OIL GAUGE		ｶﾏｼﾞｸｵｲﾙｹﾞｰｼﾞ	2
18		SS-7091410-SP	SCREW 9/64-40 L=13.5		ﾏﾙﾋﾗﾈｼﾞ 9/64-40 L=13.5	2
19		B3418-512-000	PRESSER PLATE		ﾊﾟｲﾌﾟｵｻｴ	2
20		BP-3000000-00	VINYL TUBE, WHITE D=3		ﾋﾞﾆｰﾙﾊﾟｲﾌﾟ	1.3
21		SQ-1110401-MZ	CONNECTING SCREW		ﾁｭｰﾌﾞﾚﾝｹﾂﾈｼﾞ	5
22		B1807-512-009	BUSHING, INTERMEDIATE B		ｼﾀｼﾞｸ ﾅｶﾒﾀﾙ B	1
23		B3513-512-000	LUBRICATING OIL PUMP SHAFT		ｷｭｰﾕﾎﾟﾝﾌﾟｼﾞｸ	1
24		SS-8150410-SP	SCREW 15/64-28 L=4		ﾄﾒﾈｼﾞ 15/64-28 L=4	2
25		SS-7110720-SP	SCREW 11/64-40 L=7		ﾏﾙﾋﾗﾈｼﾞ 11/64-40 L=7	2
26		B3502-512-000-A	OIL ADJUSTING BASE		ｱｽﾞﾗ ﾌﾞﾝﾊﾟｲﾀﾞｲ	1
27		NS-6110310-SP	NUT 11/64-40		ﾛｯｶｸﾅｯﾄ 11/64-40	1
28		B1834-512-000-A	OIL ADJUSTING SCREW		ﾕﾘｮｳ ﾁｮｳｾﾂﾈｼﾞ	1
29		SS-7111410-SP	SCREW 11/64-40 L=14		ﾏﾙﾋﾗﾈｼﾞ 11/64-40 L=14	1
30		B3534-155-000	PLUNGER		ﾌﾟﾗﾝｼﾞｬｰ	1
31		B1214-038-000	PLUNGER SPRING		ﾌﾟﾗﾝｼﾞｬｰ ｵｻｴﾊﾞﾈ	1
32		B3511-512-000	PLUNGER PRESSER		ﾌﾟﾗﾝｼﾞｬｰｵｻｴ	1
33		SS-7090910-SP	SCREW 9/64-40 L= 8.5		ﾏﾙﾋﾗﾈｼﾞ 9/64-40 L=8.5	1
34		SS-7110720-SP	SCREW 11/64-40 L=7		ﾏﾙﾋﾗﾈｼﾞ 11/64-40 L=7	1
35		B1850-512-000	BUSHING HOLDER		ｷｭｰｼﾞｸﾁ ｶﾅｸﾞ	1
36		B1851-512-000	FILTER SCREEN		ｷｭｰｼﾞｸﾁ ｱﾐ	1
37		NS-6090310-SP	NUT 9/64-40		ﾛｯｶｸﾅｯﾄ 9/64-40	1
38		NS-6110310-SP	NUT 11/64-40		ﾛｯｶｸﾅｯﾄ 11/64-40	2
39		G1834-119-000	OIL ADJUSTING SCREW		ﾕﾘｮｳ ﾁｮｳｾﾂﾈｼﾞ	2
40		EA-9500802-00	CLIP		ｹﾞﾝｿｸﾊﾞﾝﾄﾞ 150	1
41		SS-8150710-SP	SCREW 15/64-28 L=7		ﾄﾒﾈｼﾞ 15/64-28 L=7	1
42		SS-9660720-SP	SCREW 1/4-40 L=7		ﾛｯｶｸﾎﾞﾙﾄ 1/4-40 L=7	2
43		G1863-119-000	GASKET		ﾊｲｴﾈｼﾞ ﾊﾟｯｷﾝ	2
44		G8218-119-000	OIL PAD		ｱﾌﾞﾗﾀﾞﾏﾘｻﾞ	1
45		G8217-119-000	OIL RESERVOIR		ｱﾌﾞﾗﾀﾞﾏﾘ	1
46		B8219-125-000	OIL DRAIN CAP GASKET		ﾊｲｴｱﾅﾌﾀ ﾊﾟｯｷﾝ	2
47		SS-6741010-SP	SCREW 3/8-28 L=10		ﾋﾗﾈｼﾞ 3/8-28 L=10	2
48		B8226-125-000	RUBBER CUSHION		ﾄｰﾌﾞ ｻｻｴｺﾞﾑ	4
49		B8227-125-000	FELT CUSHION		ﾄｰﾌﾞ ｸｯｼｮﾝ	4
50		SS-6110480-SP	SCREW 11/64-40 L=4.3		ﾋﾗﾈｼﾞ 11/64-40 L=4.3	2
51		G5661-119-000	CHIP GUARD COVER		ｽﾉｸｽﾞ ﾎﾞｰｼｲﾀ	1
52		B9121-012-000	OIL CAN		ｱﾌﾞﾗﾋﾞﾝ	1

10. THREAD STAND UNIT
糸立装置

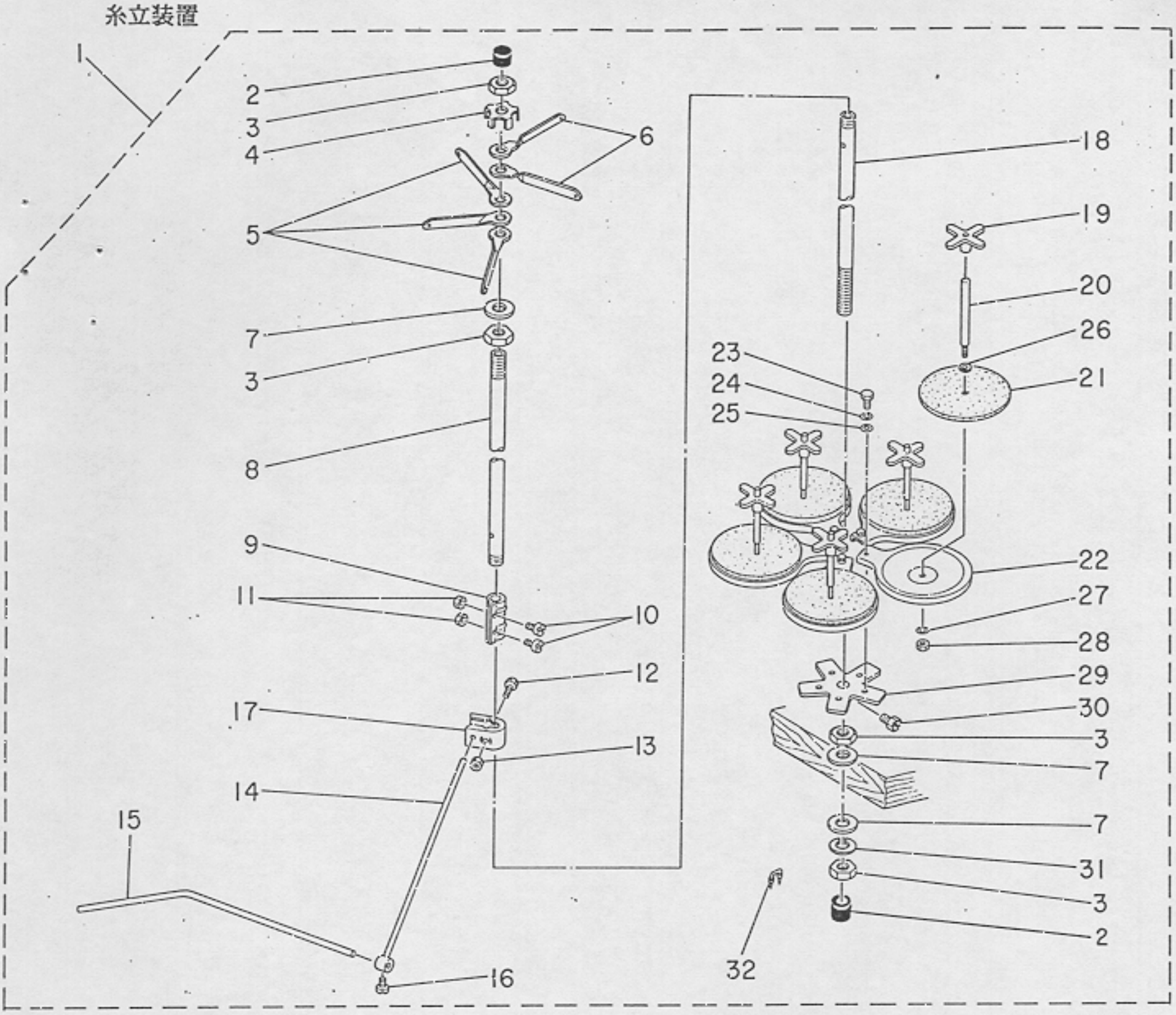

Ref. No.	Note 注記	Part No. 品番	Description	E. C. 変更年月	品名	Amt. Req. 数量
1		B3301-704-0A0	THREAD STAND ASM.		ｲﾄﾀﾃｿｰﾁ ｸﾐ	1
2		B3311-704-000	SPOOL REST ROD RUBBER CAP		ｲﾄﾀﾃﾎﾞｰ ﾎｺﾞｺﾞﾑ	(2)
3		B3317-704-000	NUT C15		ｲﾄﾀﾃﾎﾞｰ ﾄﾒﾅｯﾄ	(4)
4		B3306-704-000	THREAD GUIDE STOPPER PLATE		ｲﾄﾀﾃ ｲﾄｱﾝﾅｲ ﾄﾒｲﾀ	(1)
5		B3307-704-000	THREAD GUIDE A		ｲﾄﾀﾃ ｲﾄｱﾝﾅｲ A	(3)
6		B3308-704-000	THREAD GUIDE B		ｲﾄﾀﾃ ｲﾄｱﾝﾅｲ B	(2)
7		WP-1702600-SO	WASHER 17X30X2.6		ﾋﾗｻﾞｶﾞﾈ 17X30X2.6	(3)
8		B3313-704-000-A	SPOOL REST ROD, UPPER		ｲﾄﾀﾃﾎﾞｰ ｳｴ	(1)
9		B3305-704-000-A	SPOOL REST ROD JOINT		ｲﾄﾀﾃﾎﾞｰﾂｷﾞﾃ	(1)
10		SM-6041410-SC	SCREW M4X0.7 L=14		ﾋﾗｺﾈｼﾞ M4X0.7 L=14	(2)
11		NM-6040000-SN	NUT M4		ﾛｯｶｸﾅｯﾄ M4X0.7 1ｼｭ	(2)
12		SM-6052700-SC	SCREW M5 L=27		ﾋﾗｺﾈｼﾞ M5X0.8 L=27	(1)
13		NM-6050000-SC	NUT M5		ﾛｯｶｸﾅｯﾄ M5X0.8 1ｼｭ	(1)
14		B3309-704-000	THREAD GUIDE ARM		ｲﾄﾀﾃ ｲﾄｱﾝﾅｲ ｳﾃﾞ	(1)
15		B3311-804-000	LOWER THREAD GUIDE		ｲﾄﾀﾃ ｲﾄｱﾝﾅｲ ｼﾀ	(1)
16		SS-711C540-SP	SCREW 11/64-40 L=5		ﾏﾙﾋﾗﾈｼﾞ 11/64-40 L= 5	(1)
17		B3304-704-000-A	THREAD GUIDE ARM HOLDER		ｲﾄｱﾝﾅｲｳﾃﾞ ﾎﾙﾀﾞｰ	(1)
18		B3301-704-000-A	SPOOL REST ROD, LOWER		ｲﾄﾀﾃﾎﾞｰ ｼﾀ	(1)
19		B3312-C12-000	SPOOL RETAINER		ｲﾄﾏｷ ﾌﾚﾄﾞﾒ	(5)
20		B3307-804-000	SPOOL PIN		ｲﾄﾏｷ ｳｹﾎﾞｰ	(5)
21		B3311-012-000	SPOOL REST CUSHION		ｲﾄﾏｷｳｹｻﾞ	(5)
22		B3303-704-000	SPOOL REST		ｲﾄﾀﾃ ｳｹｲﾀ	(5)
23		SM-9050813-SE	SCREW M5X0.8 L=8		ﾛｯｶｸﾎﾞﾙﾄ M5X0.8 L=8	(5)
24		WS-0521010-KN	SPRING WASHER 5.2X8.2X1		ﾊﾞﾈｻﾞｶﾞﾈ 5.2X8.2X1	(5)
25		WP-0520656-SA	WASHER 5.2X9.5X0.6		ﾋﾗｻﾞｶﾞﾈ 5.2X9.5X0.6	(5)
26		WP-0560860-SE	WASHER 5.6X12X0.8		ﾋﾗｻﾞｶﾞﾈ 5.6X12X0.8	(5)
27		WS-0521010-KN	SPRING WASHER 5.2X8.2X1		ﾊﾞﾈｻﾞｶﾞﾈ 5.2X8.2X1	(5)
28		NS-6120310-SP	NUT 3/16-28		ﾛｯｶｸﾅｯﾄ 3/16-28	(5)
29		B3302-704-000	SPOOL REST BRACKET		ｲﾄﾀﾃ ｳｹﾀﾞｲ	(1)
30		SM-9061080-SE	SCREW M6 L=10		ﾛｯｶｸﾎﾞﾙﾄ M6 L=10	(1)
31		WS-1643202-KR	SPRING WASHER 16.4X26.6X3.2		ﾊﾞﾈｻﾞｶﾞﾈ 16.4X26.6X3.2	(1)
32		MA0-11532000	STAPLE		ｺｰﾄﾞ ｽﾃｯﾌﾟﾙ	(3)

TABLE OF EXCHANGING PARTS 交換部品一覧表

1. SEWING MACHINE COMPONENTS ミシン関係

Needle gauge 針 幅	Throat plate asm. 針板（組）	Needle clamp asm. 針留（組）	Bobbin thread knife bracket 下メス取付台	Joint connecting plate ジョイント連結板	Pivot 上糸ツカミ支点軸
				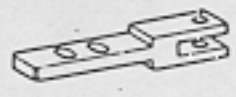	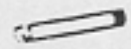
*9.5 mm (3/8")	G1109-119-0A0	G1402-116-0A0	G5651-119-000	G5662-119-000	G5633-116-000
10 mm (25/64")	G1109-119-AA0	G1402-116-BA0	G5651-119-A00	G5662-119-A00	
12 mm (15/32")	G1109-119-BA0	G1402-116-CA0	G5651-119-B00	G5662-119-B00	
*14 mm (35/64")	G1109-119-CA0	G1402-116-DA0	G5651-119-C00	G5662-119-C00	G5633-116-A00
*16 mm (5/8")	G1109-119-DA0	G1402-116-EA0	G5651-119-D00	G5662-119-D00	
*18 mm (45/64")	G1109-119-EA0	G1402-116-FA0	G5651-119-E00	G5662-119-E00	
*20 mm (25/32")	G1109-119-GA0	G1402-116-GA0	G5651-119-F00	G5662-119-F00	

Needle gauge 針 幅	Counter knife 上糸固定メス	Knife 上糸メス	Bracket 上糸ツカミ支持台	Nipper spring A 糸ツカミ押シバネA	Nipper spring B 糸ツカミ押シバネB
				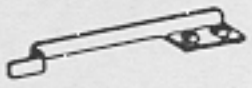	
9.5 mm (3/8")	G5630-116-000	G5629-116-000	G5628-116-000	G5660-116-00A	G5660-116-00B
10 mm (25/64")					
12 mm (15/32")					
*14 mm (35/64")	G5630-116-A00	G5629-116-A00	G5628-116-A00	G5660-116-A0A	G5660-116-A0B
*16 mm (5/8")					
*18 mm (45/64")					
*20 mm (25/32")		G5629-116-B00			

*Special order part 特別注文部品

(OPTIONAL PARTS FOR SHIM 敷板仕様特別注文部品)

Needle gauge 針 幅	Throat plate asm. 針板（組）
	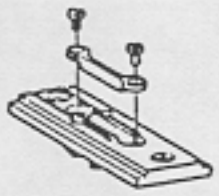
9.5 mm (3/8")	G1109-116-0A0
10 mm (25/64")	G1109-116-AA0
12 mm (15/32")	G1109-116-BA0
14 mm (35/64")	G1109-116-CA0
16 mm (5/8")	G1109-116-DA0
18 mm (45/64")	G1109-116-EA0
20 mm (25/32")	G1109-116-GA0

TABLE OF EXCHANGING PARTS

2. MECHANISM COMPONENTS

交換部品一覧表
装置関係

Needle gauge 針幅	Sewing table asm. 縫製テーブル(組)
9.5, 10, 12 mm	G5003-119-AA0-A
*14, 16 mm	G5003-119-BA0-A
*18, 20 mm	G5003-119-CA0-A

	Needle gauge 針幅	Folding plate 折り込ミ板 Left 左	Right 右
Double welt 両玉縁 / Single welt 片玉縁	9.5, 10, 12, 14 mm	G5121-119-A00-A	G5120-119-A00-A
	*16, 18, 20 mm	G5121-119-B00-A	G5120-119-B00-A
Varied double welt 変形両玉縁	9.5, 10, 12, 14 mm	G5121-119-A00-A	G5120-119-A00-A
	*16, 18, 20 mm	G5121-119-B00-A	G5120-119-B00-A

	Needle gauge 針幅	Garment clamp plate 身頃クランプ Left 左	Right 右	Clamp foot support arm 大押エ支持アーム Left 左	Right 右
Double welt 両玉縁 / Single welt 片玉縁	9.5, 10, 12, 14 mm	G5137-119-A00-A	G5138-119-A00-A	G5103-119-000-A	G5104-119-000-A
	*16, 18, 20 mm	G5137-119-B00-A	G5138-119-B00-A		
Varied double welt 変形両玉縁	9.5, 10, 12, 14 mm	G5137-119-A00-A	G5138-119-A00-A		
	*16, 18, 20 mm	G5137-119-B00-A	G5138-119-B00-A		

Needle gauge 針幅	Folding plate stopper 折り込ミ板ストッパー Left 左	Right 右	Folding plate spring 折り込ミ板バネ	Workpiece guide spring 生地ガイドバネ	Sliding shaft 大押エ支持アーム スライド軸
9.5, 10, 12, 14 mm	G5131-116-C00	G5130-116-C00	G5129-116-C00	G5328-116-000	G5146-119-A00
*16, 18, 20 mm	G5131-116-D00	G5130-116-D00	G5129-116-D00	G5328-116-A00	G5146-119-B00

Needle gauge 針幅	Knife holder asm. メスホルダー(組)	Knife shaft base stopper メス軸台ストッパー
9.5, 10 mm	G5246-116-AA0	
12 mm	G5246-116-BA0	
*14 mm	G5225-119-AA0	G5262-116-000
*16 mm	G5225-119-BA0	
*18 mm	G5225-119-CA0	
*20 mm	G5225-119-DA0	

Selective part 選択部品	Rubber sole 身頃クランプゴム Left 左	Right 右
Specification 仕様		
Standard 標準	G5152-119-A00	G5152-119-B00
For heavy-weight materials 厚物用	G5152-119-C00	G5152-119-D00
Sponge スポンジ	G5152-119-E00	G5152-119-F00
Sponge (for heavy-weight materials) スポンジ(厚物用)	G5152-119-G00	G5152-119-H00

*Special order part 特別注文部品

TABLE OF EXCHANGING PARTS

交換部品一覧表

3. WELT PATCH BASE PLATE COMPONENTS

玉布基板関係

Needle gauge 針幅	Double welt 両玉縁			A compound double welt 複合両玉縁 (Single welt 片玉縁)			Varied double welt 変形両玉縁 (Single welt 片玉縁)			Single welt 片玉縁		
G		L	R		L	R		L	R		L	R
*(9.5mm 3/8") 10mm(25/64")	G5328-119-A00	4.3	4.3	G5329-119-A00	9.3	9.3	G5330-119-A00	6.9	1.7	G5331-119-A00	9.3	4.3
	G5328-119-B00	3.8	3.8	G5329-119-B00	8.8	8.8	G5330-119-B00	8.3	0.3	G5331-119-B00	9.3	3.8
				G5329-119-C00	8.3	8.3	G5330-119-C00	7.8	0.8			
				G5329-119-D00	7.8	7.8	G5330-119-D00	7.3	1.3			
				G5329-119-E00	7.3	7.3	G5330-119-E00	9.3	1.7			
				G5329-119-F00	7.5	7.5	G5330-119-F00	8.0	1.3			
							G5330-119-G00	8.0	1.7			
				G5329-119-H00	7.0	0.8	G5330-119-H00	7.1	1.7			
							G5330-119-J00	8.3	1.7			
							G5330-119-K00	8.1	0.5			
							G5330-119-L00	9.3	0.8			
12mm(15/32")	G5328-119-A0D	5.3	5.3	G5329-119-A0D	11.3	11.3	G5330-119-A0D	8.9	1.7	G5331-119-A0D	11.3	5.3
	G5328-119-B0D	5.0	5.0	G5329-119-B0D	10.3	10.3	G5330-119-B0D	11.3	3.0			
				G5329-119-C0D	9.3	9.3	G5330-119-C0D	8.6	2.6			
							G5330-119-D0D	10.1	0.5			
*14mm(35/64")	G5328-119-A0E	6.3	6.3	G5329-119-A0E	13.3	13.3	G5330-119-A0E	10.9	1.7	G5331-119-A0E	13.3	6.3
				G5329-119-B0E	13.3	4.3	G5330-119-B0E	13.3	3.0			
*16mm(5/8")	G5328-119-A0F	7.3	7.3	G5329-119-A0F	15.3	15.3	G5330-119-A0F	15.3	1.7	G5331-119-A0F	15.3	7.3
				G5329-119-B0F	15.0	15.0	G5330-119-B0F	12.9	1.7			
*18mm(45/64")	G5328-119-A0G	8.3	8.3	G5329-119-A0G	17.3	17.3	G5330-119-A0G	17.3	1.7	G5331-119-A0G	17.3	8.3
				G5329-119-B0G	18.0	18.0	G5330-119-B0G	14.9	1.7			
*20mm(25/32")	G5328-119-A0H	9.3	9.3	G5329-119-A0H	19.3	19.3	G5330-119-A0H	19.3	1.7	G5331-119-A0H	19.3	9.3
							G5330-119-B0H	16.9	1.7			

* Special order part 特別注文部品

OPTIONAL PARTS

特別注文部品

1. SA-6 : STAND FOR STANDING WORK
立ち作業用スタンド

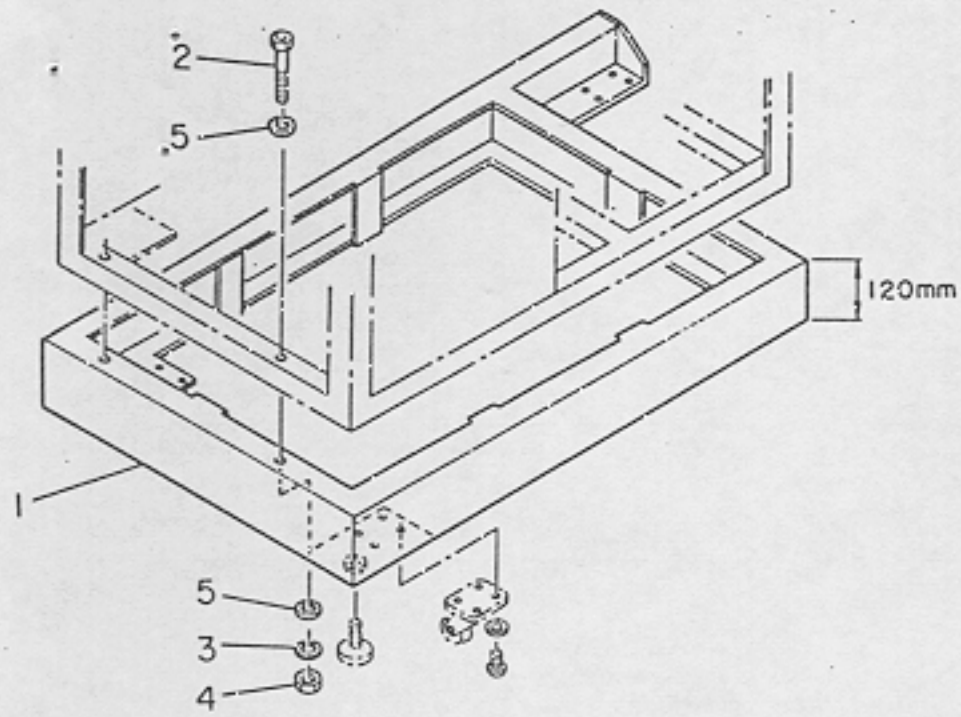

2. PARTS FOR SHIM SPECIFICATIONS
敷板仕様部品

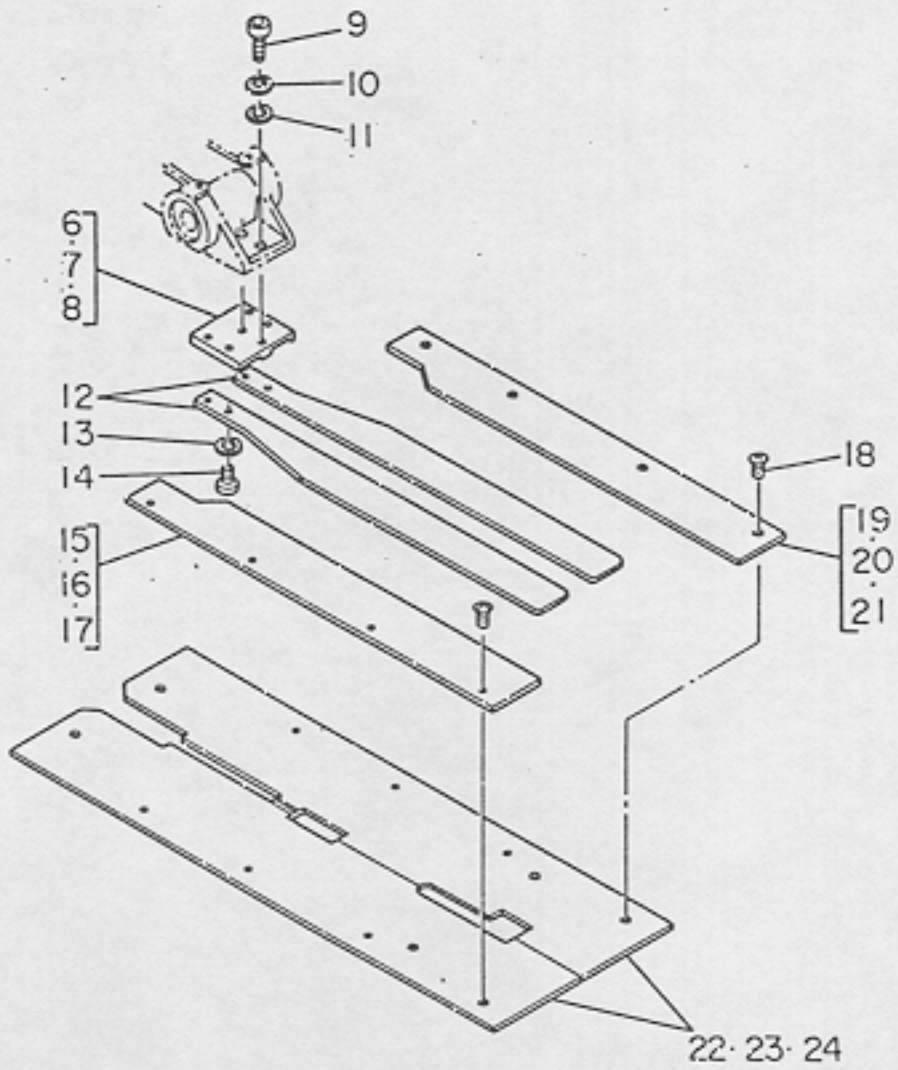

3. SA-3 : DARTS STRETCHER UNIT
ダーツ延バシ装置

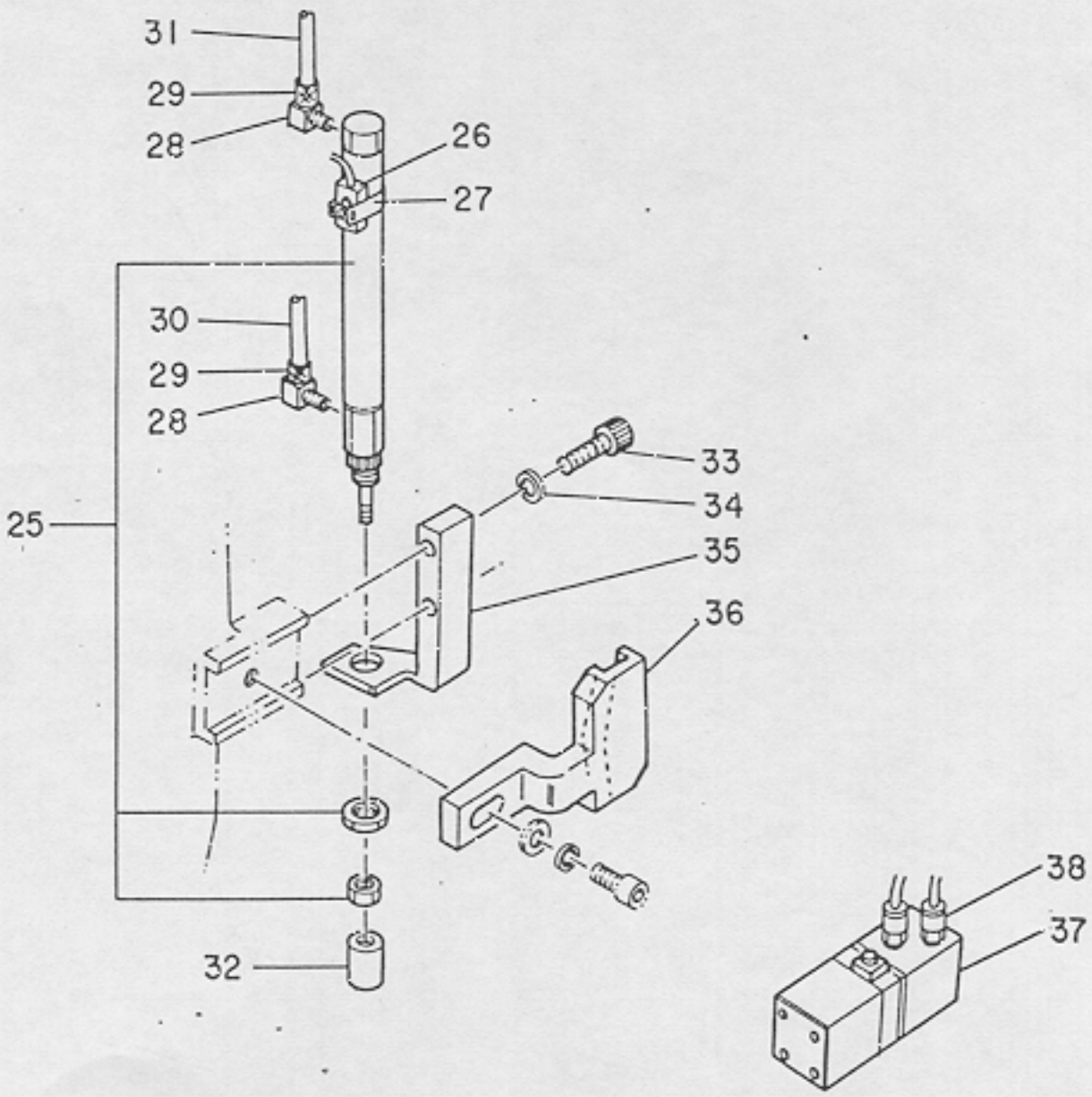

1. SA-6 : STAND FOR STANDING WORK
立ち作業用スタンド

Ref. No.	Note 注記	Part No. 品番	Description	E. C. 変更年月	品名	Amt. Req. 数量
1		GSA-06001000	STAND		ｽﾀﾝﾄﾞ	1
2		SH-6107002-TP	SCREW M10 L=70		ﾛｯｶｸｱﾅﾎﾞﾙﾄ	3
3		WS-1020002-KN	SPRING WASHER M10		ﾊﾞﾈｻﾞｶﾞﾈ M10	3
4		NM-6100001-SC	NUT M10X1.5		ﾛｯｶｸﾅｯﾄ M10 1ｼｭ	3
5		GSA-06002000	WASHER		ﾜｯｼｬ	6

2. PARTS FOR SHIM SPECIFICATIONS
敷板仕様部品

Ref. No.	Note 注記	Part No. 品番	Description	E. C. 変更年月	品名	Amt. Req. 数量
6	◇01	G5127-116-A00	SHIM BASE 10,12MM		ｼｷｲﾀﾞｲ ｹﾞｰｼﾞ	1
7	◇02	G5127-116-B00	SHIM BASE 14,16MM		ｼｷｲﾀﾞｲ ｹﾞｰｼﾞ	1
8	◇03	G5127-116-C00	SHIM BASE 18,20MM		ｼｷｲﾀﾞｲ ｹﾞｰｼﾞ	1
9		SH-6051202-TP	SCREW M5X0.8 L=12		ﾛｯｶｸｱﾅﾎﾞﾙﾄ M5X0.8 L=12	2
10		WS-0510002-KN	SPRING WASHER 5.1X8.5X1.3		ﾊﾞﾈｻﾞｶﾞﾈ 5.1X9.2X1.3	2
11		WP-0531000-SC	WASHER M5		ﾋﾗｻﾞｶﾞﾈ ｺｶﾞﾀﾜﾘ M5	2
12		G5125-116-A00	SHIM		ｼｷｲﾀﾞｲ	2
13		WS-0441040-KP	SPRING WASHER 4.4X7.4X1		ﾊﾞﾈｻﾞｶﾞﾈ 4.4X7.4X1	4
14		SS-5090610-SP	SCREW 9/64-40 L=6		ﾄﾗｽﾈｼﾞ 9/64-40 L=6	4
15	◇01	G5095-116-B0A	SHIM GUIDE, LEFT 10,12MM		ｼｷｲﾀｶﾞｲﾄﾞ L	1
16	◇02	G5095-116-B0B	SHIM GUIDE, LEFT 14,16MM		ｼｷｲﾀｶﾞｲﾄﾞ L	1
17	◇03	G5095-116-B0C	SHIM GUIDE, LEFT 18,20MM		ｼｷｲﾀｶﾞｲﾄﾞ L	1
18		SS-5090210-SP	SCREW 9/64-40 L=2		ﾄﾗｽﾈｼﾞ 9/64-40 L=2	4
19	◇01	G5095-116-A0A	SHIM GUIDE, RIGHT 10,12MM		ｼｷｲﾀｶﾞｲﾄﾞ R	1
20	◇02	G5095-116-A0B	SHIM GUIDE, RIGHT 14,16MM		ｼｷｲﾀｶﾞｲﾄﾞ R	1
21	◇03	G5095-116-A0C	SHIM GUIDE, RIGHT 18,20MM		ｼｷｲﾀｶﾞｲﾄﾞ R	1
22	◇01	G5003-116-BAA	SEWING TABLE ASM. 10,12MM		ﾎｳｾｲﾃｰﾌﾞﾙ ｸﾐ	1
23	◇02	G5003-116-BAB	SEWING TABLE ASM. 14,16MM		ﾎｳｾｲﾃｰﾌﾞﾙ ｸﾐ	1
24	◇03	G5003-116-BAC	SEWING TABLE ASM. 18,20MM		ﾎｳｾｲﾃｰﾌﾞﾙ ｸﾐ	1

3. SA-3 : DARTS STRETCHER UNIT
ダーツ延バシ装置

Ref. No.	Note 注記	Part No. 品番	Description	E. C. 変更年月	品名	Amt. Req. 数量
25		GSA-020050A0	DARTS STRETCHING CYLINDER ASM.		ﾀﾞｰﾂﾉﾊﾞｼｮｳ ｼﾘﾝﾀﾞｰ ｸﾐ	1
26		G6701-119-0A0	CONTACTLESS SWITCH ASM. C		ｷﾝｾﾂｽｲｯﾁ C ｸﾐ	1
27		GSA-03003000	SWITCH HOLDER B		ｽｲｯﾁ ﾄﾘﾂｹｶﾅｸﾞ B	1
28		G5680-116-000	UNIVERSAL ELBOW		ﾕﾆﾊﾞｰｻﾙｴﾙﾎﾞ	2
29		PJ-0320525-01	HOSE NIPPLE		ｳﾚﾀﾝﾎｰｽ ﾆｯﾌﾟﾙ	2
30		BT-0400251-EC	TURE HOSE, YELLOW		ｳｸｲﾄｷﾘ ｼﾘﾝﾀﾞｰﾎｰｽ (ｷ)	2.2
31		BT-0400251-EB	TUBE HOSE, BLACK		ﾎﾟﾘｳﾚﾀﾝ ﾁｭｰﾌﾞ 20	2.2
32		GSA-02004000	CYLINDER EDGE		ｼﾘﾝﾀﾞｰｴｯｼﾞ	1
33		SH-6042502-TP	SCREW M4X0.7 L=25		ﾛｯｶｸｱﾅﾎﾞﾙﾄ M4X0.7 L=25	2
34		WS-0410002-KN	SPRING WASHER M4		ﾊﾞﾈｻﾞｶﾞﾈ M4	2
35		GSA-03002000	CYLINDER BASE		ｼﾘﾝﾀﾞｰﾀﾞｲ	1
36		GSA-03001000	SLOPING GUIDE		ﾐｿﾞｶﾑ	1
37		G5425-116-0A0	4-WAY SOLENOID VALVE ASM.		4ﾎﾟｰﾄﾃﾞﾝｼﾞﾍﾞﾝ	1
38		PJ-3010651-03	HALF UNION 6XPT1/8		ﾊｰﾌﾕﾆｵﾝ	2

Note (注記) ◇01 ..... For 9.5, 10, 12 mm　　9.5、10、12mm用
◇02 ..... For 14, 16 mm　　14、16mm用
◇03 ..... For 18, 20 mm　　18、20mm用

4. SA-4: FLAP UNIT (1)
フラップ装置(1)

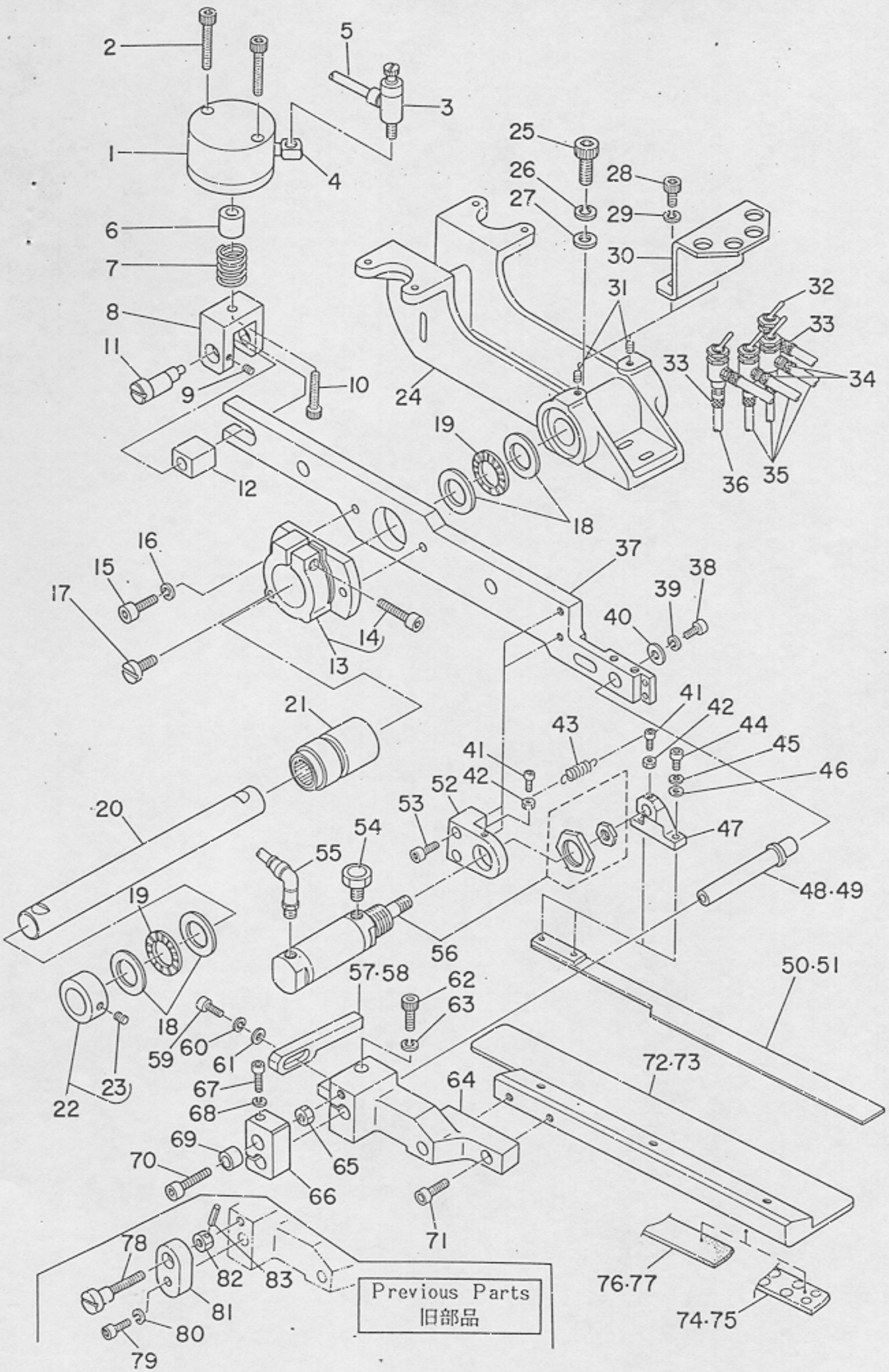

Ref. No.	Note 注記	Part No. 品番	Description	E.C. 変更年月	品名	Amt. Req. 数量
1		G5401-116-AA0	CLAMP FOOT CYLINDER ASM.		ﾀｲｵｻｴ ｼﾖｳｺｰ ｼﾘﾝﾀﾞｰ ｸﾐ	1
2		SM-6054002-TP	SCREW M5X0.8 L=40		ﾛｯｶｸｱﾅﾎﾞﾙﾄ	2
3		PC-0151020-00	SPEED CONTROLLER		ｽﾋﾟｰﾄﾞ ｺﾝﾄﾛｰﾗ	1
4		PJ-0425100-01	PT ELBOW		PT ｴﾙﾎﾞ	1
5		G5464-116-000	TUBE HOSE, GREEN		ﾁｭｰﾌﾞﾎｰｽ ﾐﾄﾞﾘ	2
6		G5115-116-C00	COLLAR		ｶﾗｰ	1
7		G5114-116-A00	PRESSURE SPRING		ｱﾂｼｭｸﾊﾞﾈ	1
8		G5115-116-B00	CYLINDER BRACKET		ﾀﾞｲｵｻｴｼｮｺｳ ｼﾘﾝﾀﾞｰﾌﾞﾗｹｯﾄ	1
9		SM-8040502-TP	SCREW M4X0.7 L=5		ﾄﾒﾈｼﾞ M4X0.7 L=5	1
10		SM-6063002-TP	SCREW M6 L=30		ﾛｯｶｸｱﾅﾎﾞﾙﾄ	1
11		G5133-116-A00	ECCENTRIC PIN		ｴｷｾﾝﾋﾟﾝ	1
12		G5113-116-A00	SLIDING BLOCK		ｽﾗｲﾄﾞﾒﾀﾙ	1
13		G5106-116-AA0	ARM BRACKET ASM., LEFT		ｱｰﾑｺﾃｲ ﾌﾞﾗｹｯﾄ ﾋﾀﾞﾘ	1
14		SM-6063002-TP	SCREW M6 L=30		ﾛｯｶｸｱﾅﾎﾞﾙﾄ	(1)
15		SM-6062002-TP	SCREW M6 L=20		ﾛｯｶｸｱﾅﾎﾞﾙﾄ M6 L=20	2
16		WS-0610002-KN	SPRING WASHER 6.1X12.2X1.5		ﾊﾞﾈｻﾞｶﾞﾈ M6	2
17		G5111-116-A00	SCREW		ﾀﾞｲｵｻｴ ｱｰﾑﾖｳ ｽﾗｲﾄﾞﾈｼﾞ	1
18		G5805-116-000	THRUST WASHER		ｽﾗｽﾄﾜｯｼﾄ	4
19		G5804-116-000	THRUST NEEDLE BEARING		ｽﾗｽﾄ ﾆｰﾄﾞﾙﾍﾞｱﾘﾝｸﾞ	2
20		G5102-116-A00	SUPPORT SHAFT		ﾀﾞｲｵｻｴ ｼｼﾞｸ	1
21		G5112-116-AA0	HOUSING ASM.		ﾀﾞｲｵｻｴ ﾊｳｼﾞﾝｸﾞ ｸﾐ	1
22		G5109-116-0A0	COLLAR ASM.		ｺﾗｰｶﾗｰ ｸﾐ	1
23		SM-3060602-TP	SCREW M3X6		ﾄﾒﾈｼﾞ M6 L=6	(1)
24		G5101-116-A00	CLAMP FOOT BASE		ﾀﾞｲｵｻｴﾀﾞｲ	1
25		SM-6082502-TP	SCREW M8 L=25		ﾛｯｶｸｱﾅﾎﾞﾙﾄ	2
26		WS-0820002-KN	SPRING WASHER M8		ﾊﾞﾈｻﾞｶﾞﾈ M8	2
27		WP-0841600-SC	WASHER		ﾋﾗｻﾞｶﾞﾈ	2
28		SM-6061002-TP	SCREW M6 L=10		ﾛｯｶｸｱﾅﾎﾞﾙﾄ M6 L=10	2
29		WS-0610002-KN	SPRING WASHER 6.1X12.2X1.5		ﾊﾞﾈｻﾞｶﾞﾈ M6	2
30		G5103-116-A00	MECHANICAL VALVE BASE		ﾒｶﾆｶﾙﾊﾞﾙﾌﾞ ﾄﾘﾂｹｶﾅｸﾞ	1
31		SM-8061002-TP	SCREW M6 L=10		ﾄﾒﾈｼﾞ M6 L=10	2
32		G5420-116-A00	MECHANICAL VALVE		ﾒｶﾆｶﾙﾊﾞﾙﾌﾞ	4
33		PJ-0320525-01	HOSE NIPPLE		ﾎｰｽﾆｯﾌﾟﾙ	4
34		G5605-116-000	HOSE NIPPLE		ﾎｰｽﾆｯﾌﾟﾙ	4
35		G5464-116-000	TUBE HOSE, GREEN		ﾁｭｰﾌﾞﾎｰｽ ﾐﾄﾞﾘ	2
36		G5465-116-000	TUBE HOSE, YELLOW		ﾁｭｰﾌﾞﾎｰｽ ｷ	2
37		GSA-04013000	CLAMP FOOT ARM, LEFT		ﾀﾞｲｵｻｴｱｰﾑ ﾋﾀﾞﾘ	1
38		SM-6051202-TP	SCREW M5X0,8 L=12		ﾛｯｶｸｱﾅﾎﾞﾙﾄ M5X0.8 L=12	1
39		WS-0510002-KN	SPRING WASHER 5.1X8.5X1.3		ﾊﾞﾈｻﾞｶﾞﾈ 5.1X9.2X1.3	1
40		G5108-119-000	WASHER		ﾜｯｼﾄ A	1
41		SM-6031202-TP	SCREW M3X0.5 L=12		ﾛｯｶｸｱﾅﾎﾞﾙﾄ	2
42		NM-6030001-SC	NUT M3		ﾛｯｶｸﾅｯﾄ M3X0.5 1ｼｭ	2
43		G5129-116-C00	FOLDING PLATE SPRING C		ｵﾘｺﾐｲﾀ ﾋｷﾊﾞﾈ C	1
44		SM-6041002-TP	SCREW M4 L=10		ﾛｯｶｸｱﾅﾎﾞﾙﾄ M4X0.7 L=10	2
45		WS-0410002-KN	SPRING WASHER M4		ﾊﾞﾈｻﾞｶﾞﾈ M4	2
46		WP-0430800-SC	WASHER 4.3X8X0.8		ﾋﾗｻﾞｶﾞﾈ ｺｶﾞﾀﾏﾙ M4	2
47		G5132-116-B00	FOLDING BRACKET		ｵﾘｺﾐﾌﾞﾗｹｯﾄ	1
48	◇01	G5146-119-A00	SLIDING SHAFT A		ｽﾗｲﾄﾞｼﾞｸ A	1
49	◇02	G5146-119-B00	SLIDING SHAFT B		ｽﾗｲﾄﾞｼﾞｸ B	1
50	◇01	GSA-04007000	FOLDING PLATE, LEFT		ｵﾘｺﾐｲﾀ ﾋﾀﾞﾘ	1
51	◇02	GSA-04009000	FOLDING PLATE, LEFT		ｵﾘｺﾐｲﾀ ﾋﾀﾞﾘ	1
52		G5119-116-C00	FOLDING CYLINDER BRACKET,LEFT		ｵﾘｺﾐｼﾘﾝﾀﾞｰ ﾌﾞﾗｹｯﾄ ﾋﾀﾞﾘ	1
53		SM-6051402-TP	SCREW M5X0.8 L=14		ﾛｯｶｸｱﾅﾎﾞﾙﾄ	2
54		PX-0551010-00	ELEMENT		ｴﾚﾒﾝﾄ ﾄﾘﾂｹﾆｯﾌﾟﾙ	1
55		PJ-3040651-01	ELBOW UNION 6XPT1/8		ｴﾙﾎﾞﾕﾆｵﾝ 6XPT1/8	1
56		G5402-116-AA0	WELT PATCH FOLDING CYL. ASM.		ｵﾘｺﾐ ｼﾘﾝﾀﾞｰ ｸﾐ	1
57	◇01	G5131-116-C00	FOLDING PLATE STOPPER, LEFT		ｵﾘｺﾐｲﾀ ｽﾄｯﾊﾟｰ ﾋﾀﾞﾘ	1
58	◇02	G5131-116-D00	FOLDING PLATE STOPPER, LEFT A		ｵﾘｺﾐｲﾀ ｽﾄｯﾊﾟｰ ﾋﾀﾞﾘ A	1
59		SM-6041202-TP	SCREW M4X0.7 L=12		ﾛｯｶｸｱﾅﾎﾞﾙﾄ	1
60		WS-0410002-KN	SPRING WASHER M4		ﾊﾞﾈｻﾞｶﾞﾈ M4	1
61		WP-0430800-SC	WASHER 4.3X8X0.8		ﾋﾗｻﾞｶﾞﾈ ｺｶﾞﾀﾏﾙ M4	1
62		SM-6052002-TP	SCREW M5 L=20		ﾛｯｶｸｱﾅﾎﾞﾙﾄ M5X0.8 L=20	1
63		WS-0510002-KN	SPRING WASHER 5.1X8.5X1.3		ﾊﾞﾈｻﾞｶﾞﾈ 5.1X9.2X1.3	1
64		GSA-04001000	CLAMP FOOT SUPPORT ARM, LEFT		ｵｵｻｴｼｼﾞｱｰﾑ ﾋﾀﾞﾘ	1
65	*	NM-6060001-SC	NUT M6	A.05/85	ﾛｯｶｸﾅｯﾄ M6 1ｼｭ	1
66	*	G5117-117-000	SLIDING METAL	D.10/85	ｽﾗｲﾄﾞﾒﾀﾞｲ	-
	*	G5124-117-A00	SLIDING METAL	A.10/85	ｽﾗｲﾄﾞﾒﾀﾞｲ	1
67	*	SM-6053002-TP	SCREW M5X0.8 L=30	A.05/85	ﾛｯｶｸｱﾅﾎﾞﾙﾄ	1
68	*	WS-0510002-KN	SPRING WASHER 5.1X8.5X1.3	D.10/85	ﾊﾞﾈｻﾞｶﾞﾈ 5.1X9.2X1.3	-
69	*	G5123-117-000	FLAP STOPPER A	A.05/85	ﾌﾗｯﾌﾟ ｽﾄｯﾊﾟｰ A	1
70	*	G5105-119-000	HINGE SCREW	D.10/85	ｽﾗｲﾄﾞﾖｰﾈｼﾞ	-
	*	SM-6065002-TP	SCREW M6 L=50	A.10/85	ﾛｯｶｸｱﾅﾎﾞﾙﾄ M6 L=50	1
71		SM-6051602-TP	SCREW M5X0.8 L=16		ﾛｯｶｸｱﾅﾎﾞﾙﾄ M5X0.8 L=16	2
72	◇01	GSA-04003000	GARMENT CLAMP PLATE, LEFT		ﾐｺﾞﾛｸﾗﾝﾌﾟ ﾋﾀﾞﾘ	1
73	◇02	GSA-04005000	GARMENT CLAMP PLATE, LEFT		ﾐｺﾞﾛｸﾗﾝﾌﾟ ﾋﾀﾞﾘ	1
74	◇03	G5152-116-B00	RUBBER SOLE A		ﾐｺﾞﾛ ｸﾗﾝﾌﾟ ｺﾞﾑ A	1
75	◇04	G5152-116-C00	RUBBER SOLE A		ﾐｺﾞﾛ ｸﾗﾝﾌﾟ ｺﾞﾑ A	1
76	◇05	G5152-119-F00	RUBBER SOLE, RIGHT F		ﾐｺﾞﾛｸﾗﾝﾌﾟｺﾞﾑ F	1
77	◇06	G5152-119-H00	RUBBER SOLE, RIGHT H		ﾐｺﾞﾛｸﾗﾝﾌﾟｺﾞﾑ H	1
78	*	G5105-119-000	HINGE SCREW	D.05/85	ｽﾗｲﾄﾞﾖｰﾈｼﾞ	-
79	*	SM-6051202-TP	SCREW M5X0,8 L=12	D.05/85	ﾛｯｶｸｱﾅﾎﾞﾙﾄ M5X0.8 L=12	-
80	*	WS-0510002-KN	SPRING WASHER 5.1X8.5X1.3	D.05/85	ﾊﾞﾈｻﾞｶﾞﾈ 5.1X9.2X1.3	-
81	*	G5109-119-000	SLIDING METAL	D.05/85	ｼｼﾞｱｰﾑ ｽﾗｲﾄﾞﾒﾀﾞｲ	-
82	*	NM-6060001-SC	NUT M6	D.05/85	ﾛｯｶｸﾅｯﾄ M6 1ｼｭ	-
83	*	PS-0200102-KH	SPRING PIN 2.0X10	D.05/85	ｽﾌﾟﾘﾝｸﾞﾋﾟﾝ 2.0X10	-

Note(注記)
- ◇01..... For 9.5,10,12,14 ㎜ — 9.5,10,12,14 ㎜用
- ◇02..... For 16,18,20 ㎜ — 16,18,20 ㎜用
- ◇03..... Standard — 標準
- ◇04..... For heavy-weight materials — 厚物用
- ◇05..... Sponge — スポンジ
- ◇06..... Sponge (for heavy-weight materials) — スポンジ(厚物用)

5. SA-4; FLAP UNIT (2)
フラップ装置(2)

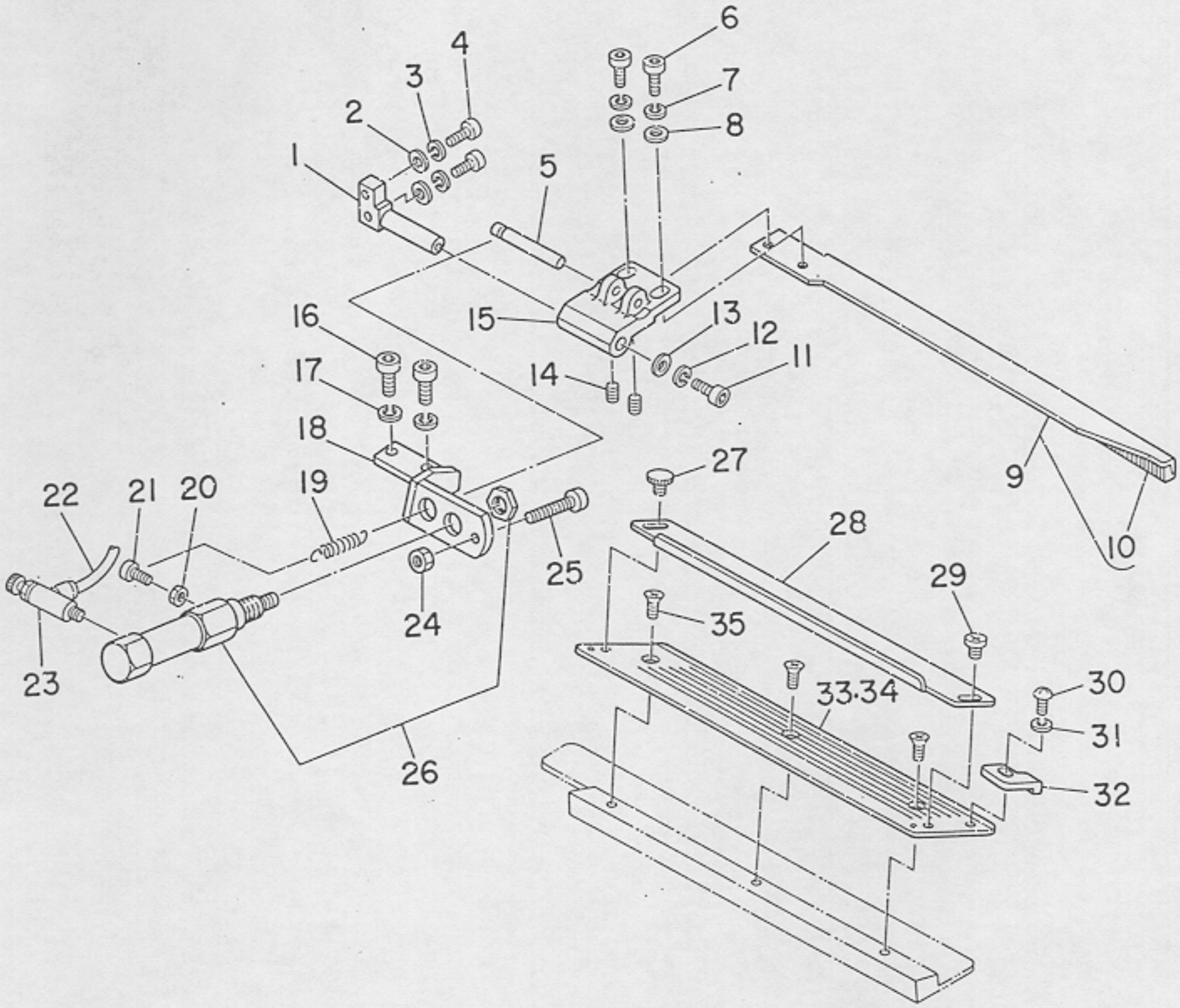

Ref. No.	Note 注記	Part No. 品番	Description	E.C. 変更年月	品名	Amt. Req. 数量
1		G5151-116-C00	FLAP PRESSER PIVOT STUD		ﾌﾗｯﾌﾟｵｻｴ ｼﾃﾝｼﾞｸ	1
2		WP-0430800-SC	WASHER 4.3X8X0.8		ﾋﾗｻﾞｶﾞﾈ ｺｶﾞﾀﾏﾙ M4	2
3		WS-0410002-KN	SPRING WASHER M4		ﾊﾞﾈｻﾞｶﾞﾈ M4	2
4		SM-6041202-TP	SCREW M4X0.7 L=12		ﾛｯｶｸｱﾅﾎﾞﾙﾄ	2
5		G5148-116-C00	PIN		ﾌﾗｯﾌﾟｵｻｴ ﾋﾟﾝ	1
6		SM-6041002-TP	SCREW M4 L=10		ﾛｯｶｸｱﾅﾎﾞﾙﾄ M4X0.7 L=10	2
7		WS-0410002-KN	SPRING WASHER M4		ﾊﾞﾈｻﾞｶﾞﾈ M4	2
8		WP-0430800-SC	WASHER 4.3X8X0.8		ﾋﾗｻﾞｶﾞﾈ ｺｶﾞﾀﾏﾙ M4	2
9		GSA-040110A0	FLAP PRESSER ASM., LEFT		ﾌﾗｯﾌﾟｵｻｴ ﾋﾀﾞﾘ ｸﾐ	1
10		G5143-116-A00	FLAP PRESSER RUBBER SOLE		ﾌﾗｯﾌﾟｵｻｴ ｺﾞﾑ	(1)
11		SM-6041002-TP	SCREW M4 L=10		ﾛｯｶｸｱﾅﾎﾞﾙﾄ M4X0.7 L=10	1
12		WS-0410002-KN	SPRING WASHER M4		ﾊﾞﾈｻﾞｶﾞﾈ M4	1
13		G5151-116-D00	WASHER		ﾜｯｼｬ	1
14		SM-8030502-TP	SCREW M3X0.5 L=5		ﾄﾒﾈｼﾞ M3X0.5 L=5	2
15		G5150-116-C00	FLAP PRESSER ARM, LEFT		ﾌﾗｯﾌﾟｵｻｴｱｰﾑ ﾋﾀﾞﾘ	1
16		SM-6051202-TP	SCREW M5X0.8 L=12		ﾛｯｶｸｱﾅﾎﾞﾙﾄ M5X0.8 L=12	2
17		WS-0510002-KN	SPRING WASHER 5.1X8.5X1.3		ﾊﾞﾈｻﾞｶﾞﾈ 5.1X9.2X1.3	2
18		G5147-116-C00	CYLINDER BRACKET, LEFT		ﾌﾗｯﾌﾟｵｻｴ ｼﾘﾝﾀﾞｰﾌﾞﾗｹｯﾄ	1
19		G5129-116-D00	FOLDING PLATE SPRING D		ｵﾘｺﾐｲﾀ ﾋｷﾊﾞﾈ D	1
20		NM-6030001-SC	NUT M3		ﾛｯｶｸﾅｯﾄ M3X0.5 1ｼｭ	1
21		SM-6031002-TP	SCREW M3X0.5 L=10		ﾛｯｶｸｱﾅﾎﾞﾙﾄ M3X0.5 L=10	1
22		BT-0400251-ED	TUBE HOSE, GREEN		ｳﾚﾀﾝﾎｰｽ ﾐﾄﾞﾘ	0.6
23		G5423-116-000	SPEED CONTROLLER		ｽﾋﾟｰﾄﾞｺﾝﾄﾛｰﾗ B	1
24		NM-6040001-SC	NUT M4		ﾛｯｶｸﾅｯﾄ M4X0.7 1ｼｭ	1
25		SM-6042502-TP	SCREW M4X0.7 L=25		ﾛｯｶｸｱﾅﾎﾞﾙﾄ M4X0.7 L=25	1
26		G5410-116-AA0	FLAP CLAMPING CYLINDER ASM.		ﾌﾗｯﾌﾟｵｻｴｼﾘﾝﾀﾞｰ ｸﾐ	1
27		G5847-116-000	KNOB SCREW		ﾂﾏﾐﾈｼﾞ	1
28		G5140-116-000	FLAP SCALE		ﾌﾗｯﾌﾟｽｹｰﾙ	1
29		SM-5040451-SC	SCREW M4X0.7 L=4		ﾊﾞｲﾝﾄﾞｺﾈｼﾞ M4 L=4	1
30		SM-3030451-SP	SCREW M3 L=4		ﾏﾙｺﾈｼﾞ M3X0.5 L=4	1
31		WP-0320500-SC	WASHER 3.2X7.0X0.5		ﾋﾗｻﾞｶﾞﾈ ｺｶﾞﾀﾏﾙ M3	1
32		G5139-116-A00	FLAP STOPPER		ﾌﾗｯﾌﾟｽﾄｯﾊﾟ 2	1
33	◇01	G5137-116-C00	FLAP BASE PLATE, LEFT		ﾌﾗｯﾌﾟﾍﾞｰｽ ﾋﾀﾞﾘ	1
34	◇02	G5137-116-D00	FLAP BASE PLATE, LEFT A		ﾌﾗｯﾌﾟﾍﾞｰｽ ﾋﾀﾞﾘ A	1
35		SM-1040601-SC	SCREW M4X0.7 L=6		ｻﾗｺﾈｼﾞ M4X0.7 L=6	3

Note(注記) ◇01..... For 9.5,10,12,14 mm　　9.5,10,12,14 mm用
◇02..... For 16,18,20 mm　　16,18,20 mm用

6. SA-4: FLAP UNIT (3)
フラップ装置(3)

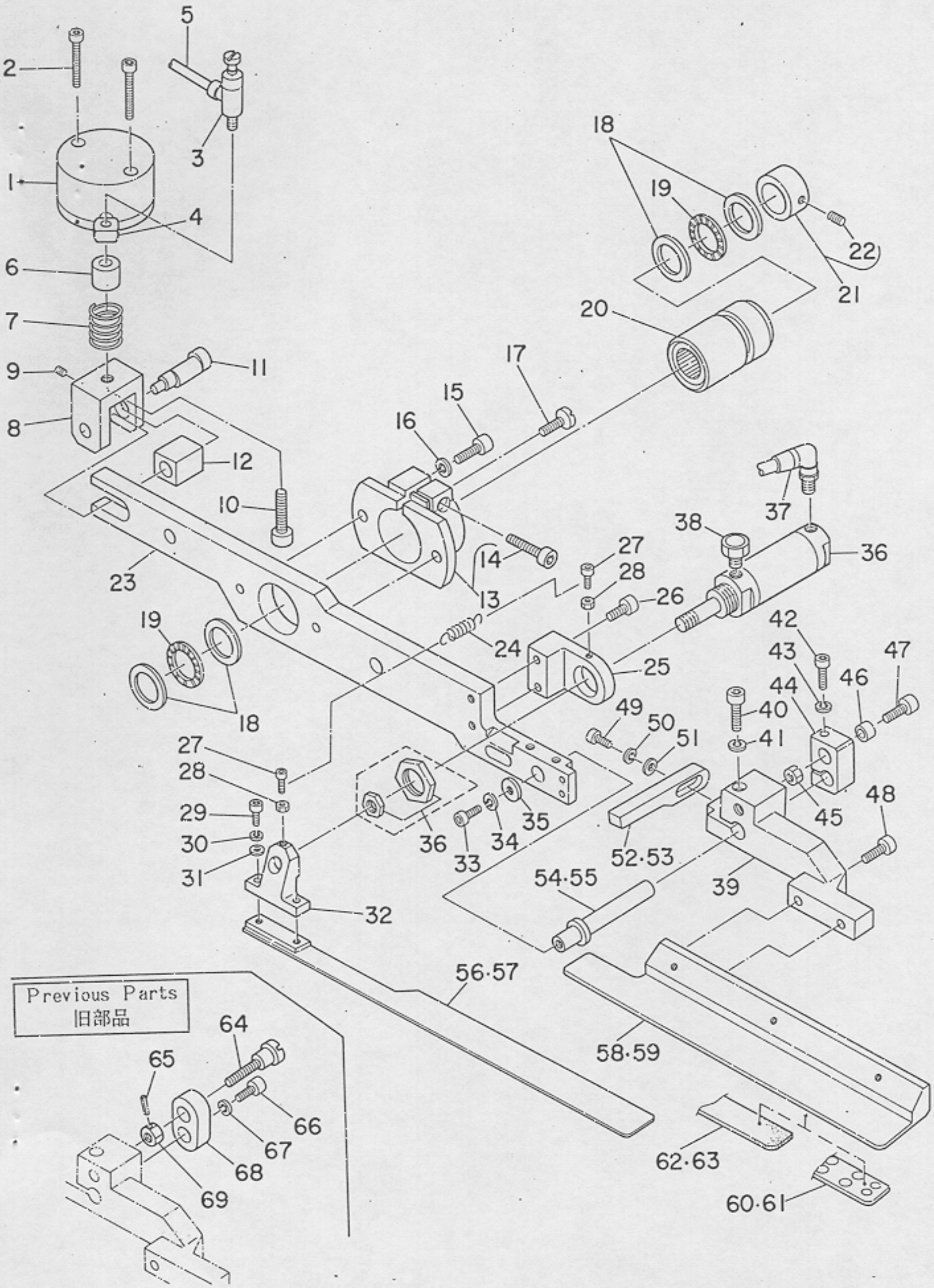

Ref. No.	Note 注記	Part No. 品番	Description	E.C. 変更年月	品名	Amt. Req. 数量
1		G5401-116-AA0	CLAMP FOOT CYLINDER ASM.		ﾀｲｵｳｪ ｼﾖｳｺｰ ｼﾘﾝﾀﾞｰ ｸﾐ	1
2		SM-6054002-TP	SCREW M5X0.8 L=40		ﾛｯｶｸｱﾅﾎﾞﾙﾄ	2
3		PC-0151020-00	SPEED CONTROLLER		ｽﾋﾟｰﾄﾞ ｺﾝﾄﾛｰﾗ	1
4		PJ-0425100-01	PT ELBOW		PT ｴﾙﾎﾞ	1
5		G5460-116-000	TUBE HOSE, RED		ﾁｭｰﾌﾞﾎｰｽ ｱｶ	2
6		G5115-116-C00	COLLAR		ｶﾗｰ	1
7		G5114-116-A00	PRESSURE SPRING		ｱﾂｼｭｸﾊﾞﾈ	1
8		G5115-116-B00	CYLINDER BRACKET		ﾀﾞｲｵｳｪｼﾖｺｳ ｼﾘﾝﾀﾞｰﾌﾞﾗｹｯﾄ	1
9		SM-8040502-TP	SCREW M4X0.7 L=5		ﾄﾒﾈｼﾞ M4X0.7 L=5	1
10		SM-6063002-TP	SCREW M6 L=30		ﾛｯｶｸｱﾅﾎﾞﾙﾄ	1
11		G5133-116-A00	ECCENTRIC PIN		ｴｷｾﾝﾋﾟﾝ	1
12		G5113-116-A00	SLIDING BLOCK		ｽﾗｲﾄﾞﾒﾀﾙ	1
13		G5106-116-BA0	ARM BRACKET ASM., RIGHT		ｱｰﾑｺﾃｲ ﾌﾞﾗｹｯﾄ ﾐｷﾞ ｸﾐ	1
14		SM-6063002-TP	SCREW M6 L=30		ﾛｯｶｸｱﾅﾎﾞﾙﾄ	(1)
15		SM-6062002-TP	SCREW M6 L=20		ﾛｯｶｸｱﾅﾎﾞﾙﾄ M6 L=20	2
16		WS-0610002-KN	SPRING WASHER 6.1X12.2X1.5		ﾊﾞﾈｻﾞｶﾞﾈ M6	2
17		G5111-116-A00	SCREW		ﾀﾞｲｵｳｪ ｱｰﾑﾖｳ ｽﾗｲﾄﾞﾈｼﾞ	1
18		G5805-116-000	THRUST WASHER		ｽﾗｽﾄﾜｯｼﾔ	4
19		G5804-116-000	THRUST NEEDLE BEARING		ｽﾗｽﾄ ﾆｰﾄﾞﾙﾍﾞｱﾘﾝｸﾞ	2
20		G5112-116-AA0	HOUSING ASM.		ﾀﾞｲｵｳｪ ﾊｳｼﾞﾝｸﾞ ｸﾐ	1
21		G5109-116-0A0	COLLAR ASM.		ｺﾃｰｶﾗｰ ｸﾐ	1
22		SM-8060602-TP	SCREW M8X6		ﾄﾒﾈｼﾞ M6 L=6	(1)
23		GSA-04014000	CLAMP FOOT ARM, RIGHT		ﾀﾞｲｵｳｪｱｰﾑ ﾐｷﾞ	1
24		G5129-116-C00	FOLDING PLATE SPRING C		ｵﾘｺﾐｲﾀ ﾋｷﾊﾞﾈ C	1
25		G5119-116-D00	FOLDING CYLINDER BRACKET,RIGHT		ｵﾘｺﾐｼﾘﾝﾀﾞｰ ﾌﾞﾗｹｯﾄ ﾐｷﾞ	1
26		SM-6051402-TP	SCREW M5X0.8 L=14		ﾛｯｶｸｱﾅﾎﾞﾙﾄ	2
27		SM-6031202-TP	SCREW M3X0.5 L=12		ﾛｯｶｸｱﾅﾎﾞﾙﾄ	2
28		NM-6030001-SC	NUT M3		ﾛｯｶｸﾅｯﾄ M3X0.5 1ｼｭ	2
29		SM-6041002-TP	SCREW M4 L=10		ﾛｯｶｸｱﾅﾎﾞﾙﾄ M4X0.7 L=10	2
30		WS-0410002-KN	SPRING WASHER M4		ﾊﾞﾈｻﾞｶﾞﾈ M4	2
31		WP-0430800-SC	WASHER 4.3X8X0.8		ﾋﾗｻﾞｶﾞﾈ ｺｶﾞﾀﾏﾙ M4	2
32		G5132-116-B00	FOLDING BRACKET		ｵﾘｺﾐﾌﾞﾗｹｯﾄ	1
33		SM-6051202-TP	SCREW M5X0.8 L=12		ﾛｯｶｸｱﾅﾎﾞﾙﾄ M5X0.8 L=12	1
34		WS-0510002-KN	SPRING WASHER 5.1X8.5X1.3		ﾊﾞﾈｻﾞｶﾞﾈ 5.1X9.2X1.3	1
35		G5103-119-000	WASHER		ﾜｯｼﾔ A	1
36		G5402-116-AA0	BELT PATCH FOLDING CYL. ASM.		ｵﾘｺﾐ ｼﾘﾝﾀﾞｰ ｸﾐ	1
37		PJ-3040651-01	ELBOW UNION 6XPT1/8		ｴﾙﾎﾞﾕﾆｵﾝ 6XPT1/8	1
38		PX-0551010-00	ELEMENT		ｴﾚﾒﾝﾄ ﾄﾘｯｹﾆｯﾌﾟﾙ	1
39		GSA-04002000	CLAMP FOOT SUPPORT ARM, RIGHT		ﾀﾞｲｵｳｪ ｼｼﾞｱｰﾑ ﾐｷﾞ	1
40		SM-6052002-TP	SCREW M5 L=20		ﾛｯｶｸｱﾅﾎﾞﾙﾄ M5X0.8 L=20	1
41		WS-0510002-KN	SPRING WASHER 5.1X8.5X1.3		ﾊﾞﾈｻﾞｶﾞﾈ 5.1X9.2X1.3	1
42	*	SM-6053002-TP	SCREW M5X0.8 L=30	A.05/85	ﾛｯｶｸｱﾅﾎﾞﾙﾄ	1
43	*	WS-0510002-KN	SPRING WASHER 5.1X8.5X1.3	D.10/85	ﾊﾞﾈｻﾞｶﾞﾈ 5.1X9.2X1.3	-
44	*	G5117-117-000	SLIDING METAL	D.10/85	ｽﾗｲﾄﾞﾒｲﾀ	-
	*	G5125-117-A00	SLIDING METAL	A.10/85	ｽﾗｲﾄﾞﾒｲﾀ	1
45	*	NM-6060001-SC	NUT M6	A.05/85	ﾛｯｶｸﾅｯﾄ M6 1ｼｭ	1
46	*	G5123-117-000	FLAP STOPPER A	A.05/85	ﾌﾗｯﾌﾟ ｽﾄｯﾊﾟｰ A	1
47	*	G5105-119-000	HINGE SCREW	D.10/85	ｽﾗｲﾄﾞﾖｰﾈｼﾞ	-
	*	SM-6065002-TP	SCREW M6 L=50	A.10/85	ﾛｯｶｸｱﾅﾎﾞﾙﾄ M6 L=50	1
48		SM-6051602-TP	SCREW M5X0.8 L=16		ﾛｯｶｸｱﾅﾎﾞﾙﾄ M5X0.8 L=16	2
49		SM-6041202-TP	SCREW M4X0.7 L=12		ﾛｯｶｸｱﾅﾎﾞﾙﾄ	1
50		WS-0410002-KN	SPRING WASHER M4		ﾊﾞﾈｻﾞｶﾞﾈ M4	1
51		WP-0430800-SC	WASHER 4.3X8X0.8		ﾋﾗｻﾞｶﾞﾈ ｺｶﾞﾀﾏﾙ M4	1
52	◇01	G5130-116-C00	FOLDING PLATE STOPPER, RIGHT		ｵﾘｺﾐｲﾀ ｽﾄｯﾊﾟｰ ﾐｷﾞ	1
53	◇02	G5130-116-D00	FOLDING PLATE STOPPER, RIGHT A		ｵﾘｺﾐｲﾀ ｽﾄｯﾊﾟｰ ﾐｷﾞ A	1
54	◇01	G5146-119-A00	SLIDING SHAFT A		ｽﾗｲﾄﾞｼﾞｸ A	1
55	◇02	G5146-119-B00	SLIDING SHAFT B		ｽﾗｲﾄﾞｼﾞｸ B	1
56	◇01	GSA-04008000	FOLDING PLATE, RIGHT		ｵﾘｺﾐｲﾀ ﾐｷﾞ	1
57	◇02	GSA-04010000	FOLDING PLATE, RIGHT		ｵﾘｺﾐｲﾀ ﾐｷﾞ	1
58	◇01	GSA-04004000	GARMENT CLAMP PLATE, RIGHT		ﾐｺﾞﾛｸﾗﾝﾌﾟ ﾐｷﾞ	1
59	◇02	GSA-04006000	GARMENT CLAMP PLATE, RIGHT		ﾐｺﾞﾛｸﾗﾝﾌﾟ ﾐｷﾞ	1
60	◇03	G5152-116-D00	RUBBER SOLE B		ﾐｺﾞﾛ ｸﾗﾝﾌﾟ ｺﾞﾑ B	1
61	◇04	G5152-116-E00	RUBBER SOLE B		ﾐｺﾞﾛ ｸﾗﾝﾌﾟ ｺﾞﾑ B	1
62	◇05	G5152-119-E00	RUBBER SOLE, LEFT E		ﾐｺﾞﾛｸﾗﾝﾌﾟ ｺﾞﾑ E	1
63	◇06	G5152-119-G00	RUBBER SOLE, LEFT G		ﾐｺﾞﾛｸﾗﾝﾌﾟ ｺﾞﾑ G	1
64	*	G5105-119-000	HINGE SCREW	D.05/85	ｽﾗｲﾄﾞﾖｰﾈｼﾞ	-
65	*	PS-0200102-KH	SPRING PIN 2.0X10	D.05/85	ｽﾌﾟﾘﾝｸﾞﾋﾟﾝ 2.0X10	-
66	*	SM-6051202-TP	SCREW M5X0.8 L=12	D.05/85	ﾛｯｶｸｱﾅﾎﾞﾙﾄ M5X0.8 L=12	-
67	*	WS-0510002-KN	SPRING WASHER 5.1X8.5X1.3	D.05/85	ﾊﾞﾈｻﾞｶﾞﾈ 5.1X9.2X1.3	-
68	*	G5109-119-000	SLIDING METAL	D.05/85	ｼｼﾞｱｰﾑ ｽﾗｲﾄﾞﾒｲﾀ	-
69	*	NM-6060001-SC	NUT M6	D.05/85	ﾛｯｶｸﾅｯﾄ M6 1ｼｭ	-

Note(注記)	◇01.....	For 9.5,10,12,14 mm	9.5,10,12,14 mm用
	◇02.....	For 16,18,20 mm	16,18,20 mm用
	◇03.....	Standard	標準
	◇04.....	For heavy-weight materials	厚物用
	◇05.....	Sponge	スポンジ
	◇06.....	Sponge (for heavy-weight materials)	スポンジ(厚物用)

7. SA-4: FLAP UNIT (4)
フラップ装置(4)

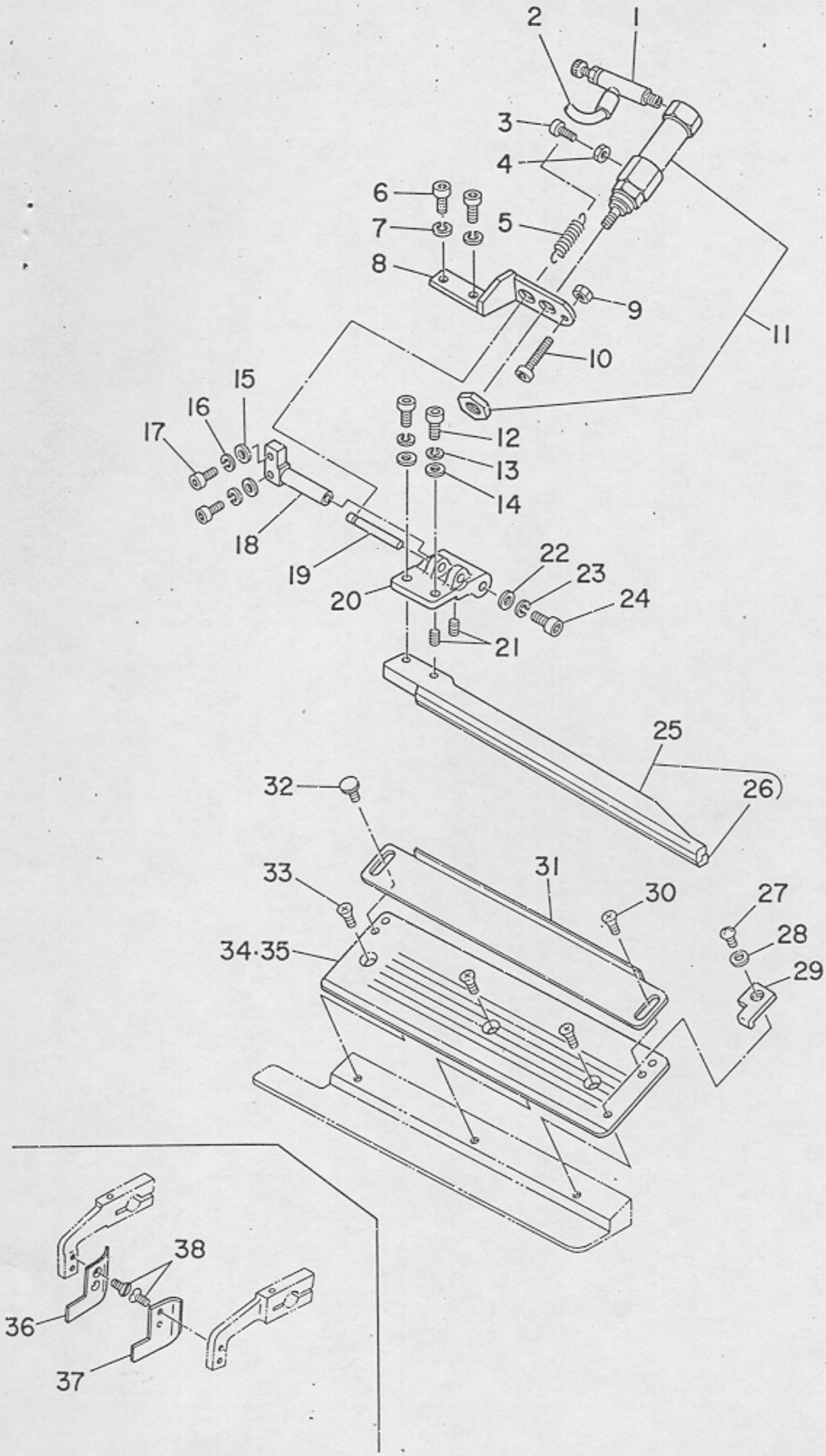

Ref. No.	Note 注記	Part No. 品番	Description	E.C. 変更年月	品名	Amt. Req. 数量
1		G5423-116-000	SPEED CONTROLLER		ｽﾋﾟｰﾄﾞｺﾝﾄﾛｰﾗ B	1
2		BT-0400251-EE	TUBE HOSE, RED		ﾎﾟﾘｳﾚﾀﾝﾁｭｰﾌﾞ ｱｶ	0.6
3		SM-6031002-TP	SCREW M3X0.5 L=10		ﾛｯｸｱﾅﾎﾞﾙﾄ M3X0.5 L=10	1
4		NM-6030001-SC	NUT M3		ﾛｯｸｱﾅﾅｯﾄ M3X0.5 1ｼｭ	1
5		G5129-116-D00	FOLDING PLATE SPRING D		ｵﾘｺﾐｲﾀ ﾋｷﾊﾞﾈ D	1
6		SM-6051202-TP	SCREW M5X0.8 L=12		ﾛｯｸｱﾅﾎﾞﾙﾄ M5X0.8 L=12	2
7		WS-0510002-KN	SPRING WASHER 5.1X8.5X1.3		ﾊﾞﾈｻﾞｶﾞﾈ 5.1X9.2X1.3	2
8		G5147-116-D00	CYLINDER BRACKET, RIGHT		ﾌﾗｯﾌﾟｵｻｴ.ｼﾘﾝﾀﾞｰﾌﾞﾗｹｯﾄ	1
9		NM-6040001-SC	NUT M4		ﾛｯｸｱﾅﾅｯﾄ M4X0.7 1ｼｭ	1
10		SM-6042502-TP	SCREW M4X0.7 L=25		ﾛｯｸｱﾅﾎﾞﾙﾄ M4X0.7 L=25	1
11		G5410-116-AA0	FLAP CLAMPING CYLINDER ASM.		ﾌﾗｯﾌﾟｵｻｴｼﾘﾝﾀﾞｰ ｸﾐ	1
12		SM-6041002-TP	SCREW M4 L=10		ﾛｯｸｱﾅﾎﾞﾙﾄ M4X0.7 L=10	2
13		WS-0410002-KN	SPRING WASHER M4		ﾊﾞﾈｻﾞｶﾞﾈ M4	2
14		WP-0430800-SC	WASHER 4.3X8X0.8		ﾋﾗｻﾞｶﾞﾈ ｺｶﾞﾀﾏﾙ M4	2
15		WP-0430800-SC	WASHER 4.3X8X0.8		ﾋﾗｻﾞｶﾞﾈ ｺｶﾞﾀﾏﾙ M4	2
16		WS-0410002-KN	SPRING WASHER M4		ﾊﾞﾈｻﾞｶﾞﾈ M4	2
17		SM-6041202-TP	SCREW M4X0.7 L=12		ﾛｯｸｱﾅﾎﾞﾙﾄ	2
18		G5151-116-C00	FLAP PRESSER PIVOT STUD		ﾌﾗｯﾌﾟｵｻｴ ｼﾃﾝｼﾞｸ	1
19		G5148-116-C00	PIN		ﾌﾗｯﾌﾟｵｻｴ ﾋﾟﾝ	1
20		G5149-116-C00	FLAP PRESSER ARM, RIGHT		ﾌﾗｯﾌﾟｵｻｴ ｱｰﾑ ﾐｷﾞ	1
21		SM-8030502-TP	SCREW M3X0.5 L=5		ﾄﾒﾈｼﾞ M3X0.5 L=5	2
22		G5151-116-D00	WASHER		ﾜｯｼｬ	1
23		WS-0410002-KN	SPRING WASHER M4		ﾊﾞﾈｻﾞｶﾞﾈ M4	1
24		SM-6041002-TP	SCREW M4 L=10		ﾛｯｸｱﾅﾎﾞﾙﾄ M4X0.7 L=10	1
25		GSA-04012040	FLAP PRESSER ASM., RIGHT		ﾌﾗｯﾌﾟｵｻｴ ﾐｷﾞ ｸﾐ	1
26		G5143-116-A00	FLAP PRESSER RUBBER SOLE		ﾌﾗｯﾌﾟｵｻｴ ｺﾞﾑ	(1)
27		SM-3030451-SP	SCREW M3 L=4		ﾏﾙｺﾈｼﾞ M3X0.5 L=4	1
28		WP-0320500-SC	WASHER 3.2X7.0X0.5		ﾋﾗｻﾞｶﾞﾈ ｺｶﾞﾀﾏﾙ M3	1
29		G5139-116-B00	FLAP STOPPER		ﾌﾗｯﾌﾟｽﾄｯﾊﾟｰ	1
30		SM-5040451-SC	SCREW M4X0.7 L=4		ﾊﾞｲﾝﾄﾞｺﾈｼﾞ M4 L=4	1
31		G5140-116-000	FLAP SCALE		ﾌﾗｯﾌﾟｽｹｰﾙ	1
32		G5847-116-000	KNOB SCREW		ﾂﾏﾐﾈｼﾞ	1
33		SM-1040601-SC	SCREW M4X0.7 L=6		ｻﾗｺﾈｼﾞ M4X0.7 L=6	3
34	◇01	G5138-116-C00	FLAP BASE PLATE, RIGHT		ﾌﾗｯﾌﾟﾍﾞｰｽ ﾐｷﾞ	1
35	◇02	G5138-116-D00	FLAP BASE PLATE, RIGHT A		ﾌﾗｯﾌﾟﾍﾞｰｽ ﾐｷﾞ A	1
36		G5325-119-B00	WORKPIECE GUIDE, RIGHT		ｷﾁﾞ ｶﾞｲﾄﾞ ﾐｷﾞ	1
37		G5324-119-A00	WORKPIECE GUIDE, LEFT		ｷｼﾞｶﾞｲﾄﾞ ﾋﾀﾞﾘ	1
38		SS-1060610-SP	SCREW 3/32-56 L=5.5		ｻﾗﾈｼﾞ 3/32-56 L=5.5	4

Note(注記) ◇01..... For 9.5,10,12,14 mm　　9.5,10,12,14 mm用
◇02..... For 16,18,20 mm　　16,18,20 mm用

Part No. 品番	Page 頁	Ref. No.
BP-3000000-00	46	16
BT-0400251-EA	34	14
BT-0400251-EA	38	6
BT-0400251-EA	38	35
BT-0400251-EB	4	48
BT-0400251-EB	6	58
BT-0400251-EB	52	31
BT-0400251-EC	34	13
BT-0400251-EC	38	7
BT-0400251-EC	52	30
BT-0400251-ED	38	13
BT-0400251-ED	56	22
BT-0400251-EE	60	2
BT-0600400-EB	43	38
BT-0600400-EC	8	34
BT-0600400-EC	43	37
BT-0800501-EA	27	24
B1110-051-0A0	34	73
B1110-051-000	34	74
B1111-051-0A0	34	75
B1111-051-00B	34	76
B1114-051-000	34	20
B1118-512-00D	34	28
B1118-512-00E	34	1
B1121-512-000	34	4
B1123-552-000-A	34	17
B1201-512-000	36	18
B1202-512-000	36	17
B1203-512-000	36	24
B1206-512-0A0	36	11
B1209-512-000	36	8
B1213-012-000	42	1
B1214-019-000	36	19
B1214-038-000	6	51
B1214-038-000	46	27
B1301-051-000	36	25
B1302-512-000	36	20
B1303-512-000	36	30
B1407-512-000	36	1
B1408-512-000	36	9
B1411-512-0A0-A	36	36
B1412-051-000	36	37
B1414-512-000	36	35
B1422-512-000	36	43
B1424-512-0A0-A	36	32
B1430-512-0A0	36	26
B1431-512-000	36	46
B1437-512-000-A	36	33
B1438-512-B00	36	28
B1440-512-000	36	44
B1606-512-000	36	31
B1606-512-000	38	66
B1603-512-000	36	29
B1608-512-000	38	70
B1622-057-000	42	8
B1623-563-000	42	6
B1624-055-000	42	27
B1625-057-0A0	42	28
B1626-562-000	42	26
B1629-555-0A0	42	41
B1636-055-000	42	23
B1639-051-000	42	24
B1640-515-0A0	42	67
B1641-515-000	42	48
B1642-515-0A0	42	71
B1643-562-000	42	65
B1644-515-0A0	42	73
B1646-562-0A0	42	61
B1647-122-000	42	76
B1647-562-000	42	57
B1648-562-0A0	42	54
B1654-515-0A0	42	51
B1655-515-000	42	49
B1657-515-000	42	46
B1660-515-000	42	35
B1662-562-000	42	36
B1664-562-000	42	56
B1702-012-000	42	2
B1801-515-000-A	40	1
B1802-512-0AB	40	2

Part No. 品番	Page 頁	Ref. No.
B1804-512-0A0	40	8
B1807-512-00B	46	18
B1813-512-000	40	6
B1816-512-0A0	40	3
B1820-051-000	40	34
B1821-051-000	40	35
B1822-051-000	40	18
B1823-051-000	40	17
B1824-051-000	40	16
B1834-512-000-A	46	24
B1850-512-000	46	28
B1851-512-000	46	34
B1901-512-0A0	36	6
B1903-552-000	36	10
B1904-512-000	36	3
B1905-541-B00	36	7
B1907-512-0A0-A	46	1
B2007-232-000	42	77
B2529-352-000	36	14
B3034-450-000	38	21
B3034-450-000	43	22
B3035-450-000	38	22
B3035-450-000	43	23
B3116-512-00B	34	62
B3120-125-000	34	63
B3125-012-000	34	61
B3125-012-000	44	10
B3125-155-000	34	29
B3126-012-000	44	8
B3126-051-000	34	66
B3127-051-000	34	67
B3127-527-000	34	68
B3129-012-B00	44	9
B3129-526-000	34	64
B3132-051-000	34	65
B3134-521-000	34	34
B3139-527-000	34	48
B3140-527-000	34	50
B3141-527-000	34	60
B3143-527-000	34	36
B3210-771-000	44	19
B3214-012-0A0	44	13
B3223-012-0A0	44	5
B3224-771-000	44	20
B3228-012-000	44	17
B3229-012-000	44	15
B3301-704-0A0	47	1
B3301-704-000	47	18
B3302-704-000	47	29
B3303-704-000	47	22
B3304-704-000	47	10
B3305-704-0A0	47	17
B3306-704-000	47	4
B3307-704-000	47	5
B3307-804-000	47	20
B3308-704-000	47	6
B3309-704-0A0	47	9
B3309-704-000	47	14
B3310-704-000	47	11
B3311-012-000	47	21
B3311-704-000	47	2
B3311-804-000	47	15
B3312-012-000	47	19
B3313-704-000	47	8
B3418-512-000	46	12
B3501-512-0A0-A	46	2
B3502-512-000-A	46	22
B3505-512-000-A	46	6
B3508-512-000	46	9
B3510-512-0A0	46	8
B3511-512-000	46	29
B3513-512-000	46	20
B3534-155-000	46	26
B3536-122-000	46	15
B8125-280-00B	6	68
B8151-771-000	6	77
B8152-771-000	6	78
B8153-771-000	6	79
B8219-125-000	46	44
B8226-125-000	46	46

Part No. 品番	Page 頁	Ref. No.
B8227-125-000	46	45
B9117-051-000	40	42
B9121-012-000	46	42
CQ-2020000-00	40	36
CQ-2020000-00	42	55
CQ-2020000-00	42	62
CQ-2020000-00	42	72
CQ-2520000-00	36	2
CQ-3030000-00	42	74
CS-040061A-SP	43	20
CS-170101A-SZ	38	68
D1450-512-C00	36	48
D8113-555-B00	6	73
D8114-555-B0E	6	72
EA-9500802-00	46	33
GAC-01002000	42	11
GAS-11111000	2	32
GHP-03537000	38	29
GSA-01001000	4	49
GSA-02004000	52	32
GSA-020050A0	52	25
GSA-03001000	52	36
GSA-03002000	52	35
GSA-03003000	52	27
GSA-04001000	54	64
GSA-04002000	58	39
GSA-04003000	54	72
GSA-04004000	58	58
GSA-04005000	54	73
GSA-04006000	58	59
GSA-04007000	54	50
GSA-04008000	58	56
GSA-04009000	54	51
GSA-04010000	58	57
GSA-040110A0	56	9
GSA-040120A0	60	25
GSA-04013000	54	37
GSA-04014000	58	23
GSA-06001000	52	1
GSA-06002000	52	5
GSP-02001000	4	35
GSP-02001000	26	1
GSP-02004000	26	48
GSP-02007000	26	62
GSP-02010000	26	12
GSP-02011000	26	13
GSP-02011000	26	35
GSP-02013000	26	32
GSP-02014000	26	17
GSP-020150A0	26	19
GSP-02018000	26	18
GSP-11001000	26	28
GSP-11002000	26	72
GSP-11003000	26	47
GSP-11004000	26	3
GSP-11004000-A	26	3-1
GSP-110050A0	26	63
GSP-11006000	26	4
GSP-11007000	26	16
GSP-11008000	26	45
GSP-11009000	26	15
GSP-11010000	26	2
GSP-11011000	26	3-2
G1109-119-AA0	34	69
G1110-116-000	34	71
G1118-119-0A0	34	5
G1118-119-000	34	6
G1119-119-000	34	7
G1131-119-000	34	27
G1217-116-000	36	23
G1401-116-000	36	34
G1402-116-BA0	36	39

Part No. 品番	Page 頁	Ref. No.
G1501-116-000	38	48
G1509-116-000	38	23
G1510-116-000	38	51
G1601-116-000	38	67
G1614-116-0A0	42	3
G1616-116-000	42	58
G1624-116-0A0	42	37
G1645-116-000	42	63
G1810-119-000	40	22
G1811-119-000	40	49
G1815-119-000	40	28
G1816-119-000	40	33
G1830-119-080	40	37
G1831-116-0A0	40	38
G1831-116-00B	40	39
G1834-119-000	46	37
G1860-119-AA0	40	26
G1860-119-BA0	40	50
G1861-119-000	40	25
G1862-119-000	46	13
G1863-119-000	46	39
G3121-116-0A0	34	33
G3121-116-080	34	32
G3123-116-000	34	39
G3125-116-000	34	59
G3126-116-000	34	38
G3128-116-000	34	49
G3137-116-0A0	34	45
G3138-116-000	34	24
G3139-116-000	34	53
G3142-116-000	34	47
G3197-116-000	34	25
G3197-116-000	34	54
G3199-116-0A0	34	44
G3204-116-0A0	44	4
G3204-116-080	44	1
G3212-116-0A0	44	18
G3213-116-000	44	11
G3217-116-000	44	22
G5001-119-000-C	2	29
G5001-119-000-D	2	29-1
G5002-119-000	2	1
G5002-119-000-A	2	1-1
G5003-116-BAA	52	22
G5003-116-BAB	52	23
G5003-116-BAC	52	24
G5003-119-AA0	4	31
G5003-119-AA0-A	4	33-1
G5003-119-BA0	4	32
G5003-119-BA0-A	4	33-2
G5003-119-CA0	4	33
G5003-119-CA0-A	4	33-3
G5004-116-00C	24	22
G5004-116-000-A	24	22-1
G5004-119-00C	2	39
G5005-119-000	2	37
G5005-119-000-A	2	37-1
G5006-119-000	2	36
G5007-119-000	2	45
G5008-119-000	2	40
G5009-119-000	4	1
G5010-119-000	4	25-1
G5012-119-A00	27	40
G5012-119-B00	27	8
G5015-116-000	6	52
G5019-116-B00	4	45
G5019-116-00A	4	44
G5020-116-B00	4	41
G5020-116-B00-A	4	41-1
G5021-116-000	2	3
G5022-116-000	2	9
G5023-116-000	4	29
G5024-116-000	2	20
G5025-116-000	2	25
G5034-116-0A0	27	32
G5036-116-000	4	20
G5038-116-000	4	24
G5041-116-0A0	4	22
G5045-116-0A0	6	7
G5046-116-000	6	19

Part No. 品番	Page 頁	Ref. No.
MMT-19081600	36	41
MMT-19081800	36	42
MTJ-VM005600	32	34
MTJ-VM005800	32	35
MTS-P00850A0	32	36
MTS-P01050A0	32	37
MJ011-050-AA0	32	31
M8401-180-AAP	32	27
M8401-181-AAP	32	28
M8401-182-AAP	32	29
M8401-182-BAP	32	30
M8512-120-BA0-A	32	32
M9633-110-000	32	33
NM-6030001-SC	4	8
NM-6030001-SC	8	48
NM-6030001-SC	10	30
NM-6030001-SC	54	42
NM-6030001-SC	56	20
NM-6030001-SC	58	28
NM-6030001-SC	60	4
NM-6040000-SB	38	31
NM-6040000-SB	38	39
NM-6040001-SC	2	44
NM-6040001-SC	4	37
NM-6040001-SC	22	22
NM-6040001-SC	22	44
NM-6040001-SC	56	24
NM-6040001-SC	60	9
NM-6050000-SB	38	9
NM-6050000-SB	43	42
NM-6050001-SC	2	5
NM-6050001-SC	2	11
NM-6050001-SC	4	40
NM-6050001-SC	12	32
NM-6050001-SC	14	22
NM-6050001-SC	27	3
NM-6050003-SC	38	17
NM-6060001-SC	6	27
NM-6060001-SC	6	36
NM-6060001-SC	6	75
NM-6060001-SC	8	63
NM-6060001-SC	10	49
NM-6060001-SC	16	13
NM-6060001-SC	16	51
NM-6060001-SC	18	34
NM-6060001-SC	26	21
NM-6060001-SC	54	65
NM-6060001-SC	54	82
NM-6060001-SC	58	45
NM-6060001-SC	58	69
NM-6060003-SC	47	13
NM-6080000-SB	42	22
NM-6080001-SC	14	34
NM-6080001-SC	24	15
NM-6080001-SC	24	65
NM-6080001-SC	26	59
NM-6080001-SC	26	66
NM-6100001-SC	20	32
NM-6100001-SC	20	37
NM-6100001-SC	52	4
NM-6100613-SB	24	29
NM-6120001-SC	2	30
NM-6120001-SC	12	58
NM-6160511-SE	47	3
NM-6500315-MZ	38	38
NM-6550315-MZ	38	8
NM-6550315-MZ	43	41
NS-6060310-SP	34	3
NS-6080210-SP	42	4
NS-6080340-SP	38	26
NS-6090310-SP	46	35
NS-6110310-SP	46	23
NS-6110310-SP	46	36
NS-6110430-SP	40	19
NS-6120310-SP	47	28
NS-6200520-SP	42	32
NS-6620310-SP	34	21
NS-6680410-SP	36	45

Part No. 品番	Page 頁	Ref. No.
PA-1501501-A0	43	39
PA-2000501-00	38	19
PA-2002502-A0	42	21
PA-2004001-A0	26	40
PA-2503001-A0	20	17
PA-2515001-A0	24	28
PA-2525001-A0	26	6
PA-3006501-A0	18	47
PC-0151020-00	8	3
PC-0151020-00	10	3
PC-0151020-00	20	21
PC-0151020-00	54	3
PC-0151020-00	58	3
PC-0151030-00	24	35
PC-0151030-00	26	9
PC-0151030-00	26	39
PJ-0320525-01	4	47
PJ-0320525-01	52	29
PJ-0320525-01	54	33
PJ-0425100-01	54	4
PJ-0425100-01	58	4
PJ-3010405-02	34	9
PJ-3010651-03	14	30
PJ-3010651-03	27	31
PJ-3010651-03	52	38
PJ-3010652-01	27	22
PJ-3020652-01	27	6
PJ-3040405-01	38	5
PJ-3040405-01	38	36
PJ-3040451-01	38	12
PJ-3040452-01	6	59
PJ-3040651-01	6	80
PJ-3040651-01	8	55
PJ-3040651-01	10	25
PJ-3040651-01	16	46
PJ-3040651-01	18	48
PJ-3040651-01	42	14
PJ-3040651-01	54	55
PJ-3040651-01	58	37
PJ-3040652-01	27	18
PJ-3040652-01	27	28
PJ-3040852-01	27	23
PJ-3050400-01	4	52
PJ-3050651-01	20	22
PJ-3050651-01	27	30
PJ-3050651-02	16	48
PJ-3050852-01	27	25
PJ-4010001-A0	38	49
PS-0200102-KH	8	64
PS-0200102-KH	10	50
PS-0200102-KH	16	14
PS-0200102-KH	18	33
PS-0200102-KH	54	83
PS-0200102-KH	58	65
PS-0250052-KP	34	46
PS-0400402-KH	46	5
PX-0551010-00	8	54
PX-0551010-00	10	26
PX-0551010-00	54	54
PX-0551010-00	58	38
RC-3700002-KP	18	29
RE-0250000-K0	38	43
RE-0500000-K0	42	25
RO-0371801-00	36	5
SD-0260271-SP	38	52
SD-0470281-SP	34	35
SD-0490261-SP	44	21
SD-0550271-TP	43	29
SD-0600271-SP	34	30
SD-0600271-SP	42	47
SD-0600321-SP	42	44
SD-0702301-SP	38	34
SD-1020961-SP	36	47
SK-1351600-SC	4	4

Part No. 品番	Page 頁	Ref. No.
SK-3482000-SC	44	27
SK-3482500-SC	44	2
SM-1031551-SP	4	3
SM-1040601-SC	4	21
SM-1040601-SC	8	77
SM-1040601-SC	10	68
SM-1040601-SC	56	35
SM-1040601-SC	60	33
SM-1040801-SC	4	30
SM-1041001-SC	12	45
SM-1041201-SC	2	42
SM-1041201-SC	16	11
SM-1041201-SC	18	37
SM-1042001-SC	4	34
SM-1043001-SC	2	2
SM-1043001-SC	4	50
SM-1061001-SC	24	42
SM-1061001-SC	26	49
SM-3030451-SP	56	30
SM-3030451-SP	60	27
SM-3030601-SC	2	24
SM-3030601-SC	2	26
SM-3030601-SC	8	73
SM-3030601-SC	10	56
SM-3030601-SC	22	39
SM-3031401-SC	14	11
SM-3040601-SC	6	23
SM-3040601-SC	20	4
SM-3042201-SC	6	15
SM-3051001-SA	24	22-2
SM-3051001-SA	26	1-2
SM-3051201-SC	2	46
SM-3051201-SC	4	9
SM-3051401-SC	4	16
SM-3051401-SC	27	9
SM-3052001-SC	4	10
SM-3061601-SC	6	61
SM-4020801-SD	34	58
SM-4051201-SC	32	21
SM-4051201-SC	32	24
SM-4053201-SN	38	11
SM-5040451-SC	56	29
SM-5040451-SC	60	30
SM-6031002-TP	22	13
SM-6031002-TP	56	21
SM-6031002-TP	60	3
SM-6031202-TP	8	47
SM-6031202-TP	10	29
SM-6031202-TP	54	41
SM-6031202-TP	58	27
SM-6032502-TP	16	20
SM-6040502-TP	4	14
SM-6040602-TP	24	41
SM-6040602-TP	26	54
SM-6040802-SP	40	43
SM-6040802-TP	12	41
SM-6040802-TP	12	51
SM-6040802-TP	16	11-1
SM-6040802-TP	18	37-1
SM-6040802-TP	26	20
SM-6041002-TP	4	42
SM-6041002-TP	6	64
SM-6041002-TP	8	46
SM-6041002-TP	10	33
SM-6041002-TP	22	28
SM-6041002-TP	22	33
SM-6041002-TP	22	38
SM-6041002-TP	54	44
SM-6041002-TP	56	6
SM-6041002-TP	56	11
SM-6041002-TP	58	29
SM-6041002-TP	60	12
SM-6041002-TP	60	24
SM-6041202-TP	8	56
SM-6041202-TP	10	44
SM-6041202-TP	27	33
SM-6041202-TP	54	59
SM-6041202-TP	56	4
SM-6041202-TP	58	49
SM-6041202-TP	60	17

Part No. 品番	Page 頁	Ref. No.
SM-6041502-TP	12	28
SM-6041502-TP	16	33
SM-6041502-TP	18	18
SM-6041602-TP	2	15
SM-6042502-TP	52	33
SM-6042502-TP	56	25
SM-6042502-TP	60	10
SM-6051002-TP	26	74
SM-6051202-TP	6	21
SM-6051202-TP	8	38
SM-6051202-TP	10	37
SM-6051202-TP	12	53
SM-6051202-TP	52	9
SM-6051202-TP	54	38
SM-6051202-TP	54	79
SM-6051202-TP	56	16
SM-6051202-TP	58	33
SM-6051202-TP	58	66
SM-6051202-TP	60	6
SM-6051402-TP	4	26
SM-6051402-TP	6	31
SM-6051402-TP	8	52
SM-6051402-TP	10	28
SM-6051402-TP	12	21
SM-6051402-TP	26	42
SM-6051402-TP	54	53
SM-6051402-TP	58	26
SM-6051602-TP	14	15
SM-6051602-TP	54	71
SM-6051602-TP	58	48
SM-6052002-TP	12	23
SM-6052002-TP	12	30
SM-6052002-TP	14	21
SM-6052002-TP	22	5
SM-6052002-TP	54	62
SM-6052002-TP	58	40
SM-6052502-TP	22	10
SM-6052502-TP	22	18
SM-6052502-TP	27	36
SM-6053002-TP	27	2
SM-6053002-TP	54	67
SM-6053002-TP	58	42
SM-6054002-TP	4	12
SM-6054002-TP	8	1
SM-6054002-TP	10	1
SM-6054002-TP	12	31
SM-6054002-TP	54	2
SM-6054002-TP	58	2
SM-6055502-TP	4	38
SM-6060802-TP	6	2
SM-6061002-TP	2	35
SM-6061002-TP	4	23
SM-6061002-TP	6	5
SM-6061002-TP	8	29
SM-6061002-TP	14	2
SM-6061002-TP	18	41
SM-6061002-TP	18	53
SM-6061002-TP	27	11
SM-6061002-TP	54	28
SM-6061202-TP	6	3
SM-6061402-TP	6	11
SM-6061402-TP	6	17
SM-6061402-TP	14	27
SM-6061402-TP	24	25
SM-6061402-TP	24	55
SM-6061402-TP	24	63
SM-6061402-TP	26	24
SM-6061402-TP	26	29
SM-6061402-TP	26	57
SM-6061602-TP	8	68
SM-6061602-TP	10	53
SM-6061602-TP	24	67
SM-6061602-TP	26	68
SM-6062002-TP	8	15
SM-6062002-TP	8	65
SM-6062002-TP	10	15
SM-6062002-TP	10	47
SM-6062002-TP	14	20
SM-6062002-TP	18	45
SM-6062002-TP	54	15

NUMERICAL INDEX OF PARTS

索引

Part No. 品番	Page 頁	Ref. No.
SM-6062002-TP	58	15
SM-6062502-TP	6	50
SM-6062502-TP	16	43
SM-6062502-TP	20	7
SM-6062502-TP	22	2
SM-6062502-TP	22	7
SM-6062502-TP	22	49
SM-6063002-TP	8	10
SM-6063002-TP	8	14
SM-6063002-TP	10	10
SM-6063002-TP	10	14
SM-6063002-TP	12	1
SM-6063002-TP	16	12
SM-6063002-TP	18	21
SM-6063002-TP	18	39
SM-6063002-TP	54	10
SM-6063002-TP	54	14
SM-6063002-TP	58	10
SM-6063002-TP	58	14
SM-6063502-TP	16	15
SM-6063502-TP	18	30
SM-6063502-TP	26	27
SM-6065002-TP	54	70
SM-6065002-TP	58	47
SM-6081542-CP	42	50
SM-6082002-SP	40	29
SM-6082002-TP	2	16
SM-6082002-TP	6	69
SM-6082002-TP	12	5
SM-6082002-TP	18	24
SM-6082002-TP	34	82
SM-6082502-TP	8	26
SM-6082502-TP	12	13
SM-6082502-TP	18	36
SM-6082502-TP	20	28
SM-6082502-TP	54	25
SM-6083002-SP	24	14
SM-6083002-TP	24	53
SM-6083002-TP	26	64
SM-6083502-TP	24	58
SM-6107002-TP	52	2
SM-8030302-TP	24	3
SM-8030502-TP	56	14
SM-8030502-TP	60	21
SM-8030802-TP	22	19
SM-3030802-TP	22	47
SM-8040502-TP	8	9
SM-8040502-TP	10	9
SM-8040502-TP	54	9
SM-8040502-TP	58	9
SM-8040602-TP	26	3-3
SM-3041402-TP	22	23
SM-8044002-TP	22	46
SM-3050602-TP	12	9
SM-3050602-TP	20	9
SM-8050602-TP	20	16
SM-3050602-TP	24	70
SM-8050602-TP	26	71
SM-3050802-TP	6	38
SM-8050802-TP	16	7
SM-8060602-TP	8	21
SM-8060602-TP	10	23
SM-8060602-TP	54	23
SM-8060602-TP	58	22
SM-8061002-TP	8	25
SM-8061002-TP	54	31
SM-8061202-TP	6	47
SM-8061202-TP	12	7
SM-8061202-TP	12	39
SM-8061202-TP	16	4
SM-3061202-TP	18	28
SM-8061402-TP	6	35
SM-8061402-TP	14	25
SM-8082002-TP	16	38
SM-8082002-TP	18	13
SM-9050813-SE	47	23
SM-9051203-SC	14	5
SM-9061080-SE	47	30
SM-9061203-SE	6	65
SM-9061203-SE	47	12

Part No. 品番	Page 頁	Ref. No.
SM-9063503-SP	6	76
SM-9065503-SP	6	74
SM-9051403-SC	6	57
SM-9082503-SC	24	66
SM-9032503-SC	26	58
SM-9082503-SC	26	67
SQ-1110401-MZ	46	3
SQ-1110401-MZ	46	17
SS-1060610-SP	22	35
SS-1060610-SP	60	38
SS-1061010-SP	6	40
SS-1061010-SP	22	30
SS-2090710-SP	34	31
SS-2110915-TP	34	72
SS-2110930-SP	46	4
SS-5060410-SP	16	31
SS-5060410-SP	18	3
SS-5080710-SP	34	2
SS-5090210-SP	52	18
SS-5090610-SP	52	14
SS-5110710-SP	38	14
SS-6060220-SP	34	22
SS-6060220-SP	34	57
SS-6080320-SP	34	70
SS-6080710-SP	38	46
SS-6081810-SP	38	25
SS-6090440-SP	43	5
SS-6090540-SP	34	37
SS-6090650-SP	38	54
SS-6090810-SP	40	14
SS-6091210-SP	40	27
SS-6091210-TP	46	7
SS-6110480-SP	46	47
SS-6111140-SP	40	7
SS-6111610-SP	16	28
SS-6111610-SP	18	4
SS-6111610-SP	20	2
SS-6111610-SP	40	23
SS-6121050-SP	42	18
SS-6121210-SP	42	42
SS-6121210-SP	42	52
SS-6122030-SP	36	49
SS-6153012-TP	40	24
SS-6661110-SP	36	21
SS-6741010-SP	46	43
SS-7081310-SN	44	23
SS-7090710-SP	34	26
SS-7090710-SP	34	43
SS-7090710-SP	34	55
SS-7090910-SP	36	38
SS-7090910-SP	43	12
SS-7090910-SP	46	31
SS-7091110-SP	38	2
SS-7091410-SP	46	11
SS-7110410-SN	44	16
SS-7110510-SP	34	18
SS-7110540-SP	47	16
SS-7110710-SP	46	10
SS-7110710-SP	46	14
SS-7110720-SP	46	21
SS-7110720-SP	46	30
SS-7110820-SN	44	6
SS-7110820-SN	44	12
SS-7111120-SP	34	15
SS-7111410-SP	46	25
SS-7150940-SP	43	45
SS-7151120-SP	40	10
SS-7151210-SP	42	68
SS-7152510-SP	42	10
SS-7620750-SP	42	34
SS-7620750-SP	42	40
SS-7680870-SP	34	85
SS-7681750-TP	36	15
SS-8080310-TP	43	21
SS-8080410-TP	34	51
SS-8080610-SP	34	52
SS-8080660-TP	36	40
SS-8081210-TH	42	5
SS-8110320-SP	34	79
SS-8110410-TP	40	31

Part No. 品番	Page 頁	Ref. No.
SS-8110510-SN	44	14
SS-8110510-SP	42	30
SS-8110520-TP	42	60
SS-8110520-TP	42	70
SS-8110750-SP	42	29
SS-8110750-SP	42	64
SS-8110750-SP	42	69
SS-8123070-SP	36	50
SS-8150410-SP	42	66
SS-8150410-SP	46	19
SS-8150710-SP	40	9
SS-8150710-SP	42	43
SS-8150710-SP	42	53
SS-8150710-SP	42	75
SS-8150710-SP	46	32
SS-8150750-SP	38	69
SS-8151550-SP	36	4
SS-8151550-SP	36	22
SS-8151550-SP	42	7
SS-8152030-SP	40	13
SS-8660530-TP	40	12
SS-8660610-TP	36	16
SS-8660810-TP	40	4
SS-8631130-SP	38	71
SS-8681650-TP	36	13
SS-9090813-TP	43	32
SS-9090813-TP	43	34
SS-9091010-SP	38	59
SS-9091010-SP	38	65
SS-9110513-TP	43	9
SS-9120910-TP	42	59
SS-9121210-TP	43	13
SS-9121410-TP	43	18
SS-9150730-SP	43	27
SS-9151120-CP	43	3
SS-9151420-TP	43	35
SS-9152130-SP	36	27
SS-9202443-CP	42	33
SS-9660720-SP	46	38
SS-9660910-SP	42	38
SS-9660940-SP	42	39
SS-9661120-CP	36	12
TA-1050504-RO	34	16
TA-1250705-RO	34	19
WP-0250516-SD	34	23
WP-0250516-SD	34	56
WP-0320500-SC	2	23
WP-0320500-SC	8	75
WP-0320500-SC	10	58
WP-0320500-SC	22	21
WP-0320500-SC	56	31
WP-0320500-SC	60	28
WP-0320501-SC	4	6
WP-0320501-SC	14	13
WP-0371016-SD	40	15
WP-0371036-SD	34	42
WP-0371036-SD	38	64
WP-0430800-SC	2	13
WP-0430800-SC	4	36
WP-0430800-SC	6	13
WP-0430800-SC	6	25
WP-0430800-SC	8	44
WP-0430800-SC	8	58
WP-0430800-SC	10	35
WP-0430800-SC	10	46
WP-0430800-SC	12	49
WP-0430800-SC	22	45
WP-0430800-SC	24	39
WP-0430800-SC	26	56
WP-0430800-SC	54	46
WP-0430800-SC	54	61
WP-0430800-SC	56	2
WP-0430800-SC	56	8
WP-0430800-SC	58	31
WP-0430800-SC	58	51
WP-0430800-SC	60	14

Part No. 品番	Page 頁	Ref. No.
WP-0430800-SC	60	15
WP-0450000-SD	38	3
WP-0450000-SD	38	57
WP-0450000-SD	40	44
WP-0482036-SD	42	16
WP-0501016-SC	44	3
WP-0501016-SC	44	7
WP-0501016-SC	44	28
WP-0510516-SD	43	15
WP-0520656-SA	47	25
WP-0531000-SC	2	6
WP-0531000-SC	2	10
WP-0531000-SC	2	48
WP-0531000-SC	4	18
WP-0531000-SC	4	28
WP-0531000-SC	12	25
WP-0531000-SC	14	7
WP-0531000-SC	24	22-4
WP-0531000-SC	26	1-4
WP-0531000-SC	26	44
WP-0531000-SC	27	4
WP-0531000-SC	52	11
WP-0531001-SC	32	19
WP-0531001-SC	32	26
WP-0560860-SE	47	26
WP-0641601-SC	6	9
WP-0641601-SC	6	48
WP-0641601-SC	16	17
WP-0641601-SC	16	53
WP-0641601-SC	18	32
WP-0641601-SC	22	4
WP-0641601-SC	24	23
WP-0641601-SC	24	61
WP-0641601-SC	24	69
WP-0641601-SC	26	23
WP-0641601-SC	26	26
WP-0641601-SC	26	31
WP-0641601-SC	26	70
WP-0641601-SC	27	13
WP-0650876-SD	43	36
WP-0651056-SD	43	2
WP-0651056-SD	43	26
WP-0651056-SD	43	44
WP-0671015-SE	6	67
WP-0841600-SC	6	55
WP-0841600-SC	6	71
WP-0841600-SC	8	28
WP-0841600-SC	12	3
WP-0841600-SC	18	23
WP-0841600-SC	20	30
WP-0841600-SC	54	27
WP-0841601-SC	2	18
WP-0850002-SP	34	83
WP-0850002-SP	40	30
WP-1202016-SD	38	50
WP-1302501-SC	2	31
WP-1302501-SC	12	56
WP-1702600-SD	47	7
WS-0310002-KN	2	27
WS-0310002-KN	4	7
WS-0310002-KN	8	74
WS-0310002-KN	10	57
WS-0310002-KN	14	12
WS-0310002-KN	16	19
WS-0310002-KN	22	12
WS-0310002-KN	22	20
WS-0310002-KN	22	40
WS-0410002-KN	2	14
WS-0410002-KN	2	43
WS-0410002-KN	4	43
WS-0410002-KN	6	14
WS-0410002-KN	6	24
WS-0410002-KN	8	45
WS-0410002-KN	8	57
WS-0410002-KN	10	34
WS-0410002-KN	10	45
WS-0410002-KN	12	27
WS-0410002-KN	12	50
WS-0410002-KN	20	5
WS-0410002-KN	22	29

Part No. 品番	Page 頁	Ref. No.
WS-0410002-KN	24	40
WS-0410002-KN	26	55
WS-0410002-KN	27	34
WS-0410002-KN	52	34
WS-0410002-KN	54	45
WS-0410002-KN	54	60
WS-0410002-KN	56	3
WS-0410002-KN	56	7
WS-0410002-KN	56	12
WS-0410002-KN	58	30
WS-0410002-KN	58	50
WS-0410002-KN	60	13
WS-0410002-KN	60	16
WS-0410002-KN	60	23
WS-0441040-KP	52	13
WS-0451040-KP	38	58
WS-0510002-KN	2	47
WS-0510002-KN	4	13
WS-0510002-KN	4	17
WS-0510002-KN	4	27
WS-0510002-KN	4	39
WS-0510002-KN	8	37
WS-0510002-KN	10	38
WS-0510002-KN	12	20
WS-0510002-KN	12	24
WS-0510002-KN	12	54
WS-0510002-KN	14	6
WS-0510002-KN	24	22-3
WS-0510002-KN	26	1-3
WS-0510002-KN	26	43
WS-0510002-KN	26	73
WS-0510002-KN	27	10
WS-0510002-KN	27	37
WS-0510002-KN	52	10
WS-0510002-KN	54	39
WS-0510002-KN	54	63
WS-0510002-KN	54	68
WS-0510002-KN	54	80
WS-0510002-KN	56	17
WS-0510002-KN	58	34
WS-0510002-KN	58	41
WS-0510002-KN	58	43
WS-0510002-KN	58	67
WS-0510002-KN	60	7
WS-0511302-KN	32	20
WS-0511302-KN	32	25
WS-0521010-KN	47	24
WS-0521010-KN	47	27
WS-0521010-KP	42	17
WS-0521010-KP	43	14
WS-0610002-KN	2	34
WS-0610002-KN	6	10
WS-0610002-KN	6	49
WS-0610002-KN	6	62
WS-0610002-KN	8	16
WS-0610002-KN	8	30
WS-0610002-KN	8	66
WS-0610002-KN	10	16
WS-0610002-KN	10	48
WS-0610002-KN	12	2
WS-0610002-KN	14	3
WS-0610002-KN	14	28
WS-0610002-KN	16	16
WS-0610002-KN	16	44
WS-0610002-KN	16	52
WS-0610002-KN	18	22
WS-0610002-KN	18	31
WS-0610002-KN	18	44
WS-0610002-KN	22	3
WS-0610002-KN	24	24
WS-0610002-KN	24	62
WS-0610002-KN	24	68
WS-0610002-KN	26	22
WS-0610002-KN	26	25
WS-0610002-KN	26	30
WS-0610002-KN	26	69
WS-0610002-KN	27	12
WS-0610002-KN	54	16
WS-0610002-KN	54	29
WS-0610002-KN	58	16

Part No. 品番	Page 頁	Ref. No.
WS-0621210-KP	6	66
WS-0820002-KN	2	17
WS-0820002-KN	6	56
WS-0820002-KN	6	70
WS-0820002-KN	8	27
WS-0820002-KN	12	14
WS-0820002-KN	18	35
WS-0820002-KN	20	29
WS-0820002-KN	24	52
WS-0820002-KN	24	57
WS-0820002-KN	26	65
WS-0820002-KN	54	26
WS-1020002-KN	52	3
WS-1220002-KN	12	57
WS-1643202-KP	47	31
WZ-0641510-KP	42	45
040-00000591	40	41
040-00001380	40	40
101-09908	40	20
101-11201	40	32
101-12050	40	11
101-12357	40	5
101-12407	40	21

Part No. 品番	Page 頁	Ref. No.

Part No. 品番	Page 頁	Ref. No.